MM7520**
ARCH FRAMED MIRROR

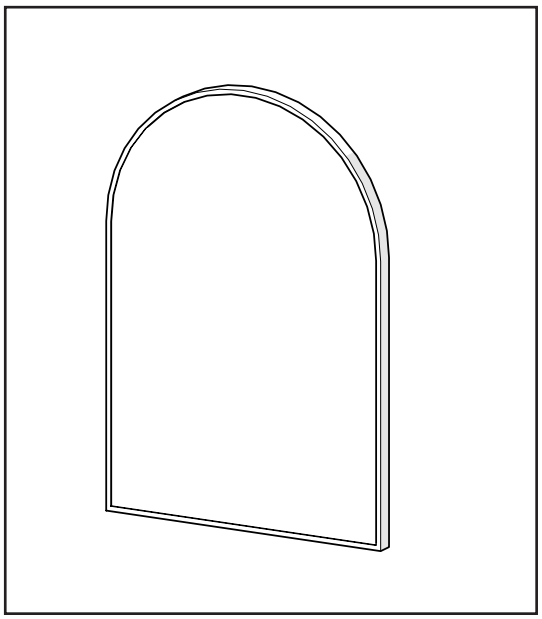

ALL ILLUSTRATIONS OF THE PRODUCT ARE FOR REFERENCE ONLY. COMPONENTS SUPPLIED WITH INDIVIDUAL PRODUCTS MAY DIFFER.

ALL PRODUCT DIMENSIONS DETAILED IN THIS INSTALLATION AND MAINTENANCE MANUAL ARE APPROXIMATE.

CONTACT DETAILS (UK)

Croydex
Central Way
Andover
Hampshire
SP10 5AW
UK

Tel: +44 (0)1264 365881
Email: info@croydex.co.uk
Web: www.croydex.com

CONTACT DETAILS (EU)

MIL
Unit 8 Purcellsinch Ind Est
Dublin Road
Kilkenny
R95 HP71
Ireland

STOP

ALWAYS READ THROUGH AND FULLY UNDERSTAND THE INSTRUCTION LEAFLET **BEFORE** STARTING THE INSTALLATION OF THIS PRODUCT.

ALWAYS CHECK THE PACKAGING AND ENSURE YOU HAVE **ALL** FIXINGS AND COMPONENT PARTS DETAILED IN THIS INSTRUCTION LEAFLET **BEFORE** RECYCLING OR DISPOSAL OF THE PACKAGING.

ALWAYS ENSURE YOU HAVE ALL THE FIXINGS AND COMPONENT PARTS **BEFORE** ATTEMPTING TO ASSEMBLE OR FIT THIS PRODUCT.

Thank you for purchasing this Croydex product. Follow the fixing and care instructions in this manual to ensure that your product is fitted safely and that it retains its high quality finish.

RETAIN THIS MANUAL FOR FUTURE REFERENCE.

SAFETY & PRODUCT CARE

1. ALWAYS make sure all parts are present. If any part is damaged or missing, do not attempt to assemble.
2. ALWAYS keep all tools out of reach of children.
3. ALWAYS take care when using power tools, particularly if there is any water in the working area.
4. ALWAYS wear eye protection when using power tools.
5. ALWAYS check for pipes and cables before drilling into walls.
6. ALWAYS use a Residual Current Circuit Breaker (RCCB).
7. ALWAYS use a drill bit that is suitable for the surface that is being drilled.
8. ALWAYS use a ceramic drill bit when drilling into tiled surfaces and use masking tape on tiled surfaces to prevent the drill slipping.
9. DO NOT use a hammer drill when drilling through tiles.
10. ALWAYS ensure the drill hole passes through the central tiled area, **DO NOT** drill on the grout line of tiles.
11. The wall plugs supplied are for use on solid walls only. For cavity walls or plasterboard walls, use specialist fixings that are suitable for the type of wall construction.
12. ALWAYS insert the wall plugs flush to the surface of the wall. If fitting to a tiled surface, the wall plugs should be inserted below the surface of the tile to avoid cracking.
13. DO NOT strike the glass surfaces with hard or sharp objects.
14. DO NOT position glass components in close contact with a heat source.
15. DO NOT use abrasive or chemical cleaners as these may damage the product. To retain the best quality finish, clean the product regularly with a soft damp cloth.

SECTION 1 - INTRODUCTION

PRODUCT FITTING

IMPORTANT! : Before attempting to install or use this product, check that it will fit and function in the desired location.

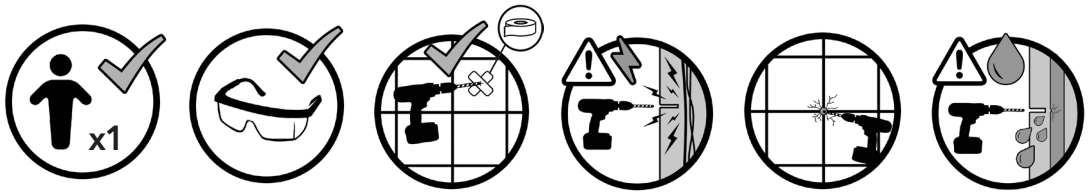

TOOLS REQUIRED (not supplied)

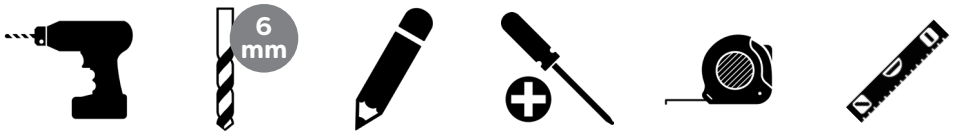

FIXING PACK

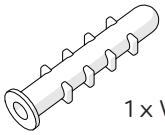

1 x Wall Plug

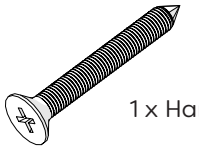

1 x Hanging Screw

SECTION 2 - INSTALLATION

BEFORE INSTALLING, ENSURE THAT THE SAFETY WARNINGS ARE FOLLOWED.

1. Measure the distance from the top of the mirror to the fixing centre. Make a note of this dimensions (DIM. Y).
These dimensions will help when mounting the mirror.

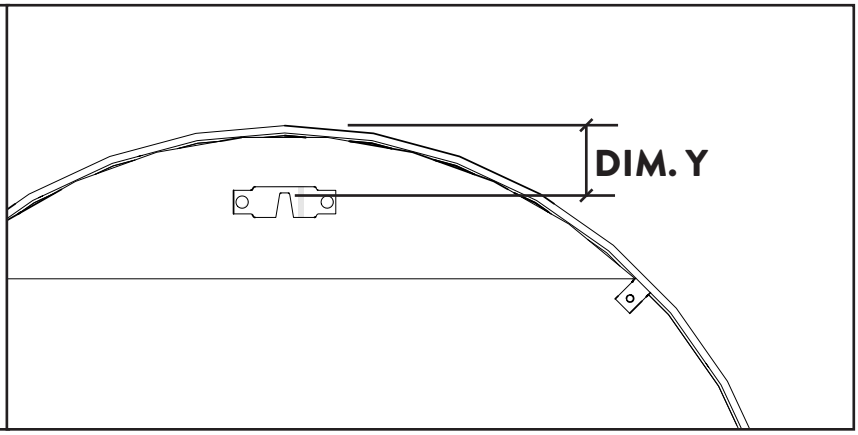

2. Position the mirror in your desired location and temporarily mark the wall at the top of the mirror using a pencil.

Remove the mirror and measure down using DIM. Y to create another marked position using a pencil- this will be location for the hanging screw.

i

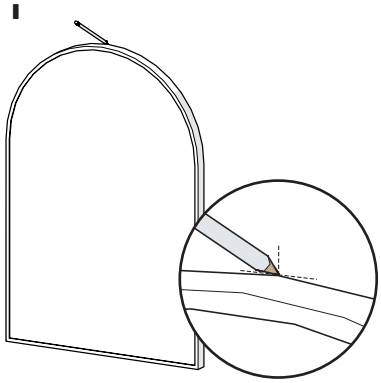

ii

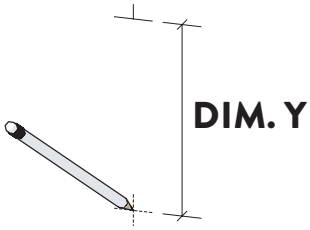

3. Drill the marked hanging position to a depth of 35mm in the marked positions using a 6mm masonry drill bit and insert the wall plug flush to the wall surface.

NOTE: If the product is being fitted onto a ceramic tiled wall, a ceramic drill bit should be used and the wall plugs should be inserted below the surface of the tile to avoid cracking.

i

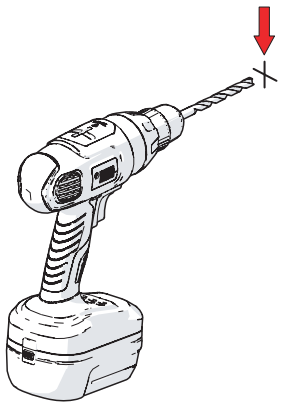

ii

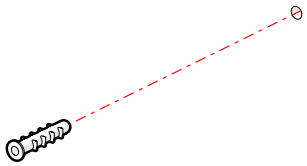

4. Using a cross-head screwdriver, screw the hanging screws into the wall plugs leaving roughly 5mm of the screw above the surface.

This is important when hanging the mirror.

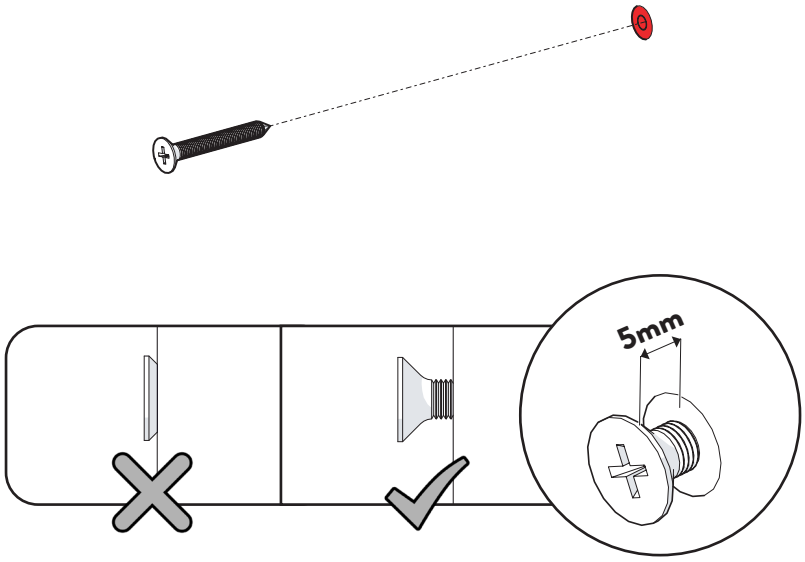

5. Hang the mirror onto the screw.

IMPORTANT! Make sure the screw is fully engaged with the hanging bracket.

NOTE: Ensure the mirror is level.

