REGISTER for your chance to WIN £100 of retail vouchers - see page 7 for details!

TRITON

Amala Quick Start Guide

Registration, Use & After Care

For the full Installation and User Guide, **scan** the QR code or go to the link below:

tritonshowers.co.uk/amalaguide

Or simply email or telephone for your guide:
Email: CXsupport@tritonshowers.co.uk
TEL: 02476 378 327

IMPORTANT SAFETY ADVICE

The shower unit **MUST BE** switched off at the isolating switch when not in use. This is a safety procedure recommended for all electrical appliances.

The shower head and hose supplied with this product are safety critical parts of your shower. Failure to use genuine Triton parts may cause injury and will invalidate your guarantee.

Thank you for choosing a Triton shower.

We want you to be able to enjoy using it day after day so we are on hand to help should you need it.

To make this easy to do, Triton kindly ask you to register your new model with us so when required, Triton know exactly what to do, go to **tritonshowers.co.uk/register**

Triton will use the data to administer your shower guarantee and any subsequent extensions.

Triton will never sell or share your data with third parties except where we are required to do so to meet our legal obligations.

Please see our privacy policy at **tritonshowers.co.uk/privacy**

The online book contains all the necessary fitting and operating instructions for your electric shower.

Care taken during the installation and use will provide a long, trouble-free life for your shower.

60425590F

Important Safety Information

Please Read

Products manufactured by Triton are safe and without risk provided they are installed, used and maintained in good working order in accordance with our instructions and recommendations.

WARNING: The appliance must not be positioned where it will be subjected to freezing conditions. If suspected of being frozen, do not use.

DO NOT operate the appliance if the shower head or spray hose becomes damaged.

DO NOT restrict flow out of the appliance by placing shower head in direct contact with your body.

DO NOT operate the appliance if water ceases to flow during use or if water has entered inside the unit because of an incorrectly fitted cover.

WARNING: If restarting the appliance immediately after stopping, be aware that a slug of hot water will be expelled for the first few seconds.

WARNING: This appliance is not to be used to provide a potable water supply.

Always disconnect the appliance from the supply before assembling, disassembling or cleaning.

The shower head must be descaled regularly.

Fit only shower heads recommended by Triton and never fit any additional device to restrict the water outlet flow.

WARNING

This appliance can be used by children aged from 3 years and above and persons with reduced physical, sensory or mental capabilities or lack of experience and knowledge if they have been given supervision or instruction concerning use of the appliance in a safe way and understand the hazards involved. Children may not play with the appliance.
Cleaning and user maintenance shall not be made by children.

Water Cable and Entry Points

WATER ● Back ➡ Others

Left: Top, bottom, back & side
Right: Bottom, back & side

CABLE △ Back ⇨ Others

Left: Top, bottom, back & side

PLEASE NOTE: Deviation from the approved entry points will invalidate product specifications and warranty.

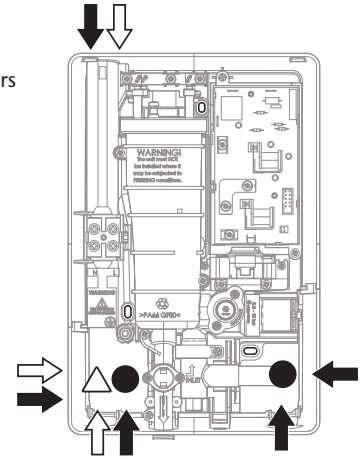

BEAB Approved Intertek

bsi BS EN 60335 KM 52009

UK CA

CE

WEEE Directive – Policy Statement

As a producer and a supplier of water heaters, Triton Showers is committed to the protection of the environment via our own environmental policy and compliance with the **WEEE directive.**

Triton Showers is fully registered with the Environment Agency under the following scheme:

Repic: Producers take-back scheme (PTS), registration number WEE/EJ3466QV
Valpak: Distributor Takeback Scheme (DTS), registration number DTS-700160

All our electric products are labelled accordingly with the crossed out wheeled bin symbol. This indicates, for disposal purposes at end of life, that these products must be taken to recognised collection points, such as local authority sites/local recycling centres; this will be free of any charges. **Do not return to Triton Showers.**

Installer Guide

Important Information

The shower installation MUST be carried out by a suitably qualified person, in the sequence of the full Installation Guide. If you have any issues or questions regarding installation, please contact Triton Customer Expericence.

Plumbing

Note: If the recommended dynamic pressure and flow is not available, there will be a noticeable reduction in flow performance from the shower head.

The installation must be in accordance with Water Regulations/Bylaws.

Consideration must be made on installation to the air gap arrangement.

The shower unit must be mounted on a finished flat surface which covers the full width and length of the back enclosure. It is important that the wall surface is flat otherwise difficulty may be encountered when fitting the cover and subsequent operation of the unit may be impaired.

Always mount the shower unit vertically and allow enough room between the ceiling and the shower to access the top cover screws.

The shower unit must not be positioned where it may be subjected to freezing conditions.

When positioning the shower unit, always ensure that it will not be in direct contact with water from the shower head, and use the mounting holes provided. Any damage to the backplate will invalidate the warranty.

The outlet must not be connected to any tap or fitting other than those specified by Triton.

It is important to ensure all pipework is flushed to remove any swarf and system debris prior to connecting your shower - see **Commissioning the Shower** section.

This appliance is intended to be permanently connected to the water mains and not connected by a hose set.

The water inlet of this applicance shall not be connected to inlet water obtained from any other water heating system.

Electrical

The installation, supply cable and circuit protection must conform with BS 7671 (IEE wiring regulations) and be sufficient for the amperage required.

IMPORTANT: Always ensure the electricity supply is isolated before commencing installation.

WARNING: This appliance must be earthed by connecting the supply cable earth conductor to the terminal block within the appliance.
It is strongly recommended to use a minimum of 10mm cabling throughout the shower installation.

The supply cable must be secured either by routing through conduit, trunking or by embedding in the wall, in accordance with IEE regulations.

Conduit entry into the shower unit can only be made in the locations detailed in the Specification/ Entry Points.

After routing the cable into the shower unit, ensure that the following connections are made:

- **EARTH** Cable to terminal marked ⏚
- **NEUTRAL** Cable to terminal marked **N**
- **LIVE** Cable to terminal marked **L**

IMPORTANT: Ensure the terminal block screws are fully tightened and make sure that no cable insulation is trapped under the screws. Loose connections can result in cable overheating.

A suitable double pole isolation switch for supply disconnections must be incorporated in the fixed wiring circuit in accordance with current wiring regulations.

Commissioning the Shower

Commissioning is an important part of the installation, as it flushes out any remaining debris and ensures that the heater unit is full of water before the heating elements are switched on.

Note: The images are representative of a Triton electric shower, not necessarily the specific model you have purchased.

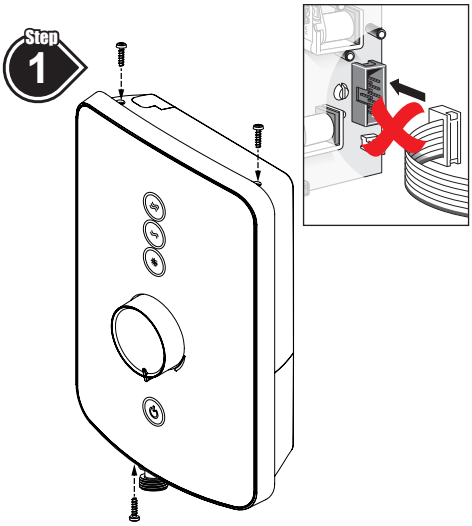

IMPORTANT: DO NOT connect the 10-way ribbon cable before the commissioning procedure has been carrried out.

- Temporarily fit the cover for commissioning.

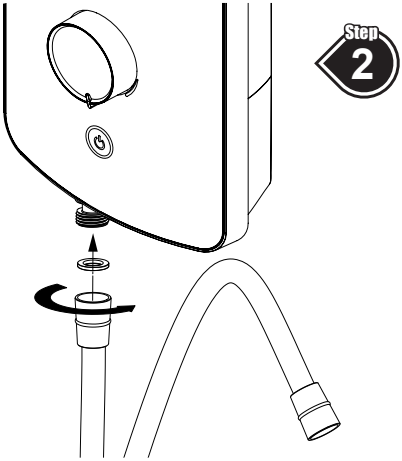

- Attach the appropriate end of the shower hose to the shower outlet using the supplied hose washer seal - **DO NOT** overtighten. **If the product is supplied with a DuElec kit, ensure the short hose is used - please see instruction book supplied with the kit.**
- Position the other end of the shower hose to the bath or tray waste. **DO NOT** fit the shower head.

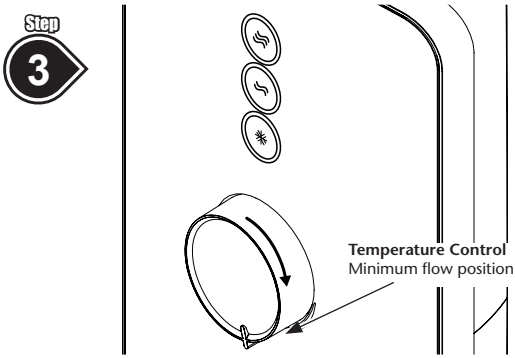

- Ensure the temperature control is turned fully clockwise to the minimum* flow position.

***IMPORTANT: Failure to turn the temperature control to the minimum flow position may cause the PRD to operate.**

Commissioning the Shower

Step 4

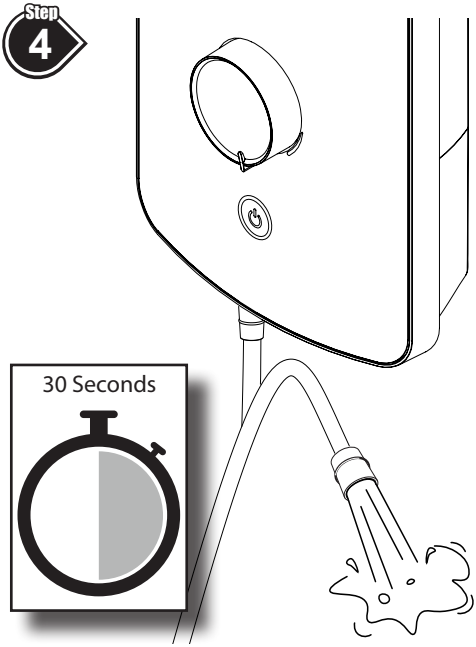

- Ensure the water supply to the shower is turned on.
- Switch on the electricity supply to the shower at the isolating switch.
- Water will start to flow from the shower hose*
- Allow water to flow for approximately 30 seconds, at the same time, slowly rotate the temperature control anticlockwise to the coolest temperature position (MAXIMUM flow).
- When a smooth flow of water is obtained, rotate the temperature control from coolest to hottest positions several times to release any remaining trapped air.
- Switch off the electricity supply to the shower at the isolating switch*.

***NOTE: On some shower models the start/stop button will require pressing for the water to start and stop flowing.**

Step 5

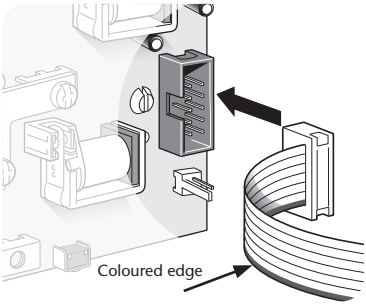

- Remove the cover.
- Attach the ribbon cable to the socket located on the power PCB inside the shower unit. Ensure the coloured edge is lowermost.
- Refit the cover, ensuring the knob spindle locates correctly* and while applying slight pressure, secure in positon with the fixing screws supplied with the shower unit.

***If unsure read the full online Installer & User Guide**

Step 6

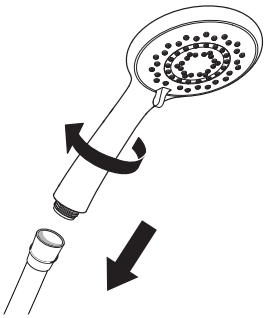

- Attach the shower head to the shower hose using the supplied hose washer seal - **DO NOT** overtighten. **If product is supplied with a DuElec kit, please see instruction book supplied with the kit.**
- Place the shower head in the shower head holder on the riser rail kit.
- The shower is now commissioned and ready for use.

Operating Your Shower

1

Switch ON the electricity supply at the isolating switch.

2

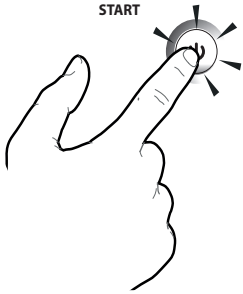

Start the shower by pressing the start/stop button.

It is common for economy to be used during summer and high for winter/summer showering.

3

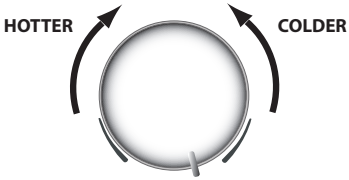

Adjust the temperature control to your preferred showering temperature.

4

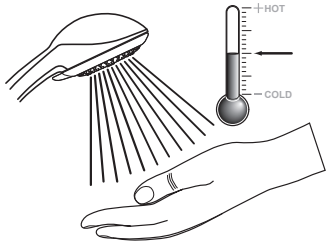

Check the temperature of the water before showering.

5

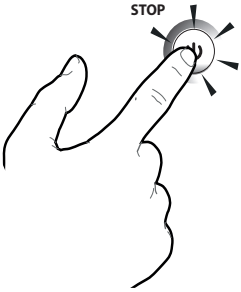

Stop the shower by pressing the start/stop button.

6

Switch OFF the electricity supply at the isolating switch.

Registering Your Shower

Registration is quick and easy to do, just select your preferred method.

1 Register online and gain entry into our **monthly prize draw for £100 of retail vouchers.**
Scan the **QR Code** or go to: **tritonshowers.co.uk/register**

2 Email: **warranty@tritonshowers.co.uk**

3 Live chat: **tritonshowers.co.uk**

4 Call: **02476 372 222**

My shower is not working, what should I do?

Don't worry, we're just a call or click away. Please don't remove the product from your wall, we can normally repair products in situ.

Call: **02476 372 222**
Monday - Thursday 9am to 5pm and Friday 9am to 4pm

Email: **CXsupport@tritonshowers.co.uk**

Proof of Purchase

PLEASE NOTE: You will need to have proof of purchase to make a claim under the standard guarantee. This could take the form of a receipt, an installation invoice covering the shower supply, an online retailer email confirmation, or any other documentation that clearly states the purchase date of your Triton shower.

What does my guarantee cover?

Once you have registered your shower, you will have access to our dedicated Customer Experience team. With just one phone call, we can arrange for one of our Triton employed engineers to visit you at home and repair your shower using genuine Triton spare parts – all of which will be **FREE** for the duration of your guarantee.

For the latest terms and conditions, please visit our website: **tritonshowers.co.uk/terms**

FREE CALL OUT

FREE PARTS

FREE LABOUR

How long is my product covered for?

TWO YEAR GUARANTEE 2

You can extend the warranty on your Triton Electric Shower up to 5 years and even beyond on a rolling 12 month basis.

Call our Customer Experience team for more details on **02476 372 222.**

PLEASE NOTE: Showers installed in a commercial application have a one year statutory guarantee **ONLY**.

Specifications

ELECTRICAL	
Nominal power - rating at 240V	Nominal power - rating at 230V
7.5kW – (32A MCB rating)	6.9kW – (32A MCB rating)
8.5kW – (40A MCB rating)	7.8kW – (40A MCB rating)
9.5kW – (40A MCB rating)	8.7kW – (40A MCB rating)
10.5kW – (45A MCB rating)	9.6kW – (45A MCB rating)
PLUMBING	
Supply Source	Mains pressure cold water only
Minimum running pressure and flow to the inlet of the shower for full performance	100kPa (1.0 bar) at 8 litres per minute for **7.5kW, 8.5kW** & **9.5kW**
	150kPa (1.5 bar) at 11 litres per minute for **10.5kW**
Maximum static pressure	1000 kPa (10 bar)
Maximum inlet temperature	28°C
Minimum inlet temperature	2°C
Inlet connection	15mm diameter
Outlet connection	½" BSP male thread
STANDARDS	
Splashproof Rating	IPX4

Spare Parts & Future Maintenance

For troubleshooting details, please refer to the full **Installation Guide** which can be downloaded using the link or QR code on the front cover of this booklet.

To purchase a genuine Triton spare part for your product, please visit **tritonshowers.co.uk/spares** for product codes and prices.

Alternatively please call our Customer Experience team on **02476 372 222** to order direct. Please have your model name available.

Triton Showers
Triton Road
Nuneaton
Warwickshire CV11 4NR

Customer Experience: 024 7637 2222
Trade Installer Hotline: 024 7637 8344
www.tritonshowers.co.uk
E-mail: CXsupport@tritonshowers.co.uk
technical@tritonshowers.co.uk

Triton is a division of Norcros Group (Holdings) Limited

For product guarantee information please go to www.tritonshowers.co.uk/product-guarantees

TRITON reserve the right to change product speci ication without prior notice. E&OE. © TRITON SHOWERS 2026