BRISTAN

Installation Instructions & User Guide

Please leave these instructions with the end user

RP3 K 1/2 C (D1)

Specifications

Dynamic Water Pressure

Min: 0.2 bar **Max:** 5.0 bar

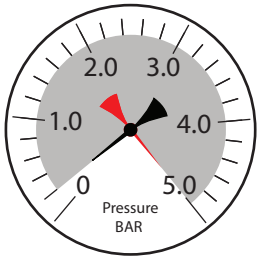

Maximum Static Pressure: 10.0 bar

Inlet Water Temperature

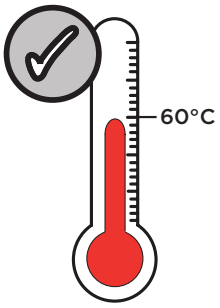

Maximum Hot 60°C

Inlet Connections

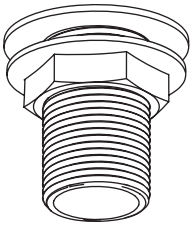

1/2" BSP

Outlet Connections

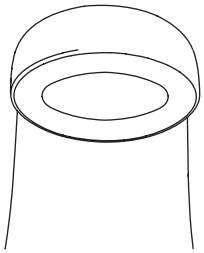

Open Outlet

Pack Contents

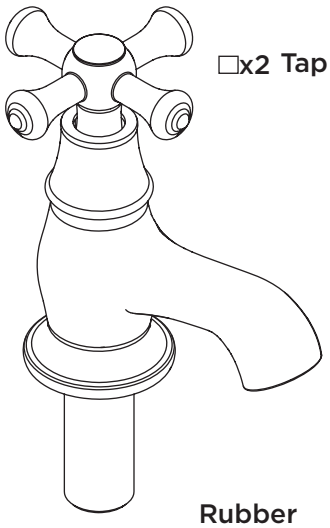

☐x2 Tap Bodies

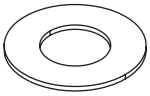

Rubber Washers ☐x2

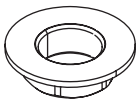

☐x2 Metal Backnuts

Operation

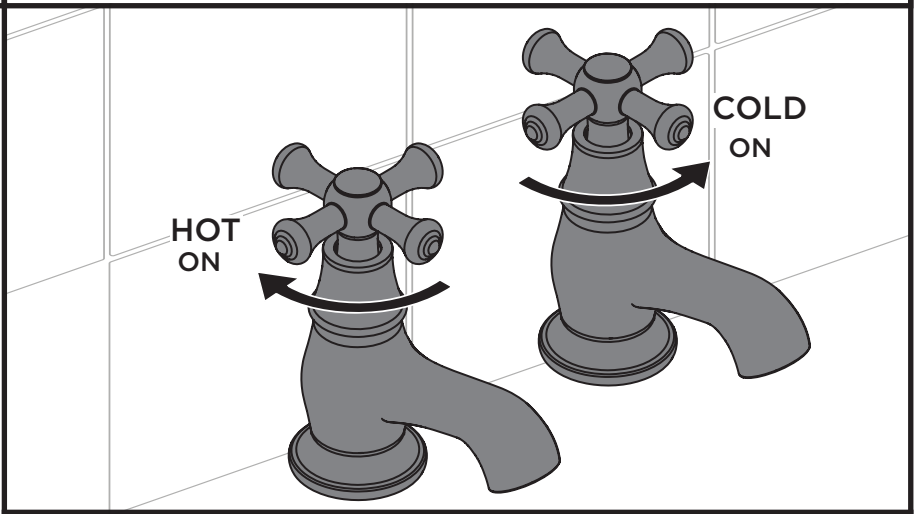

Tools Required for Installation/ Maintenance

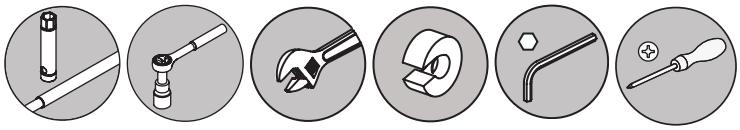

24mm Box Spanner | 17mm Socket Spanner | Adjustable Spanner | Pipe Cutters | 2mm Hex Key | Crosshead Screwdriver

Prior to Installation

All products manufactured and supplied by Bristan are safe to use provided that they are installed, operated and receive regular maintenance in accordance with these instructions.

This product needs to be installed in accordance with, and meet the requirements of The Water Supply (Water Fittings) Regulations (Northern Ireland) 2009 and The Water Supply (Water Fittings) (Scotland) Byelaws 2014. For full Installation Requirements & Notes (IRN) please visit **www.wrasapprovals.co.uk/approvals-directory**

Isolation valves must be fitted to the inlet water supplies to ensure ease of future maintenance.

Before installing this product the water supply must be thoroughly flushed in order to remove any swarf, solder etc. Full access must be made available for future maintenance/servicing purposes.

This product must not be modified in any way as this will invalidate the guarantee.

Spare Parts

To replace any spare parts for your tap, why not scan the QR Code or visit **www.bristan.com** and search for your product.

IMPORTANT

Images shown are for illustrative purposes only.
The tap you have purchased may look different to those pictured in these instructions, but will follow the same installation steps.

Your contents page will be specific to your product.
If you find your product or any of it's components differ from those shown on the contents page, please contact our Customer Support on - 0330 026 6273

Installation

1

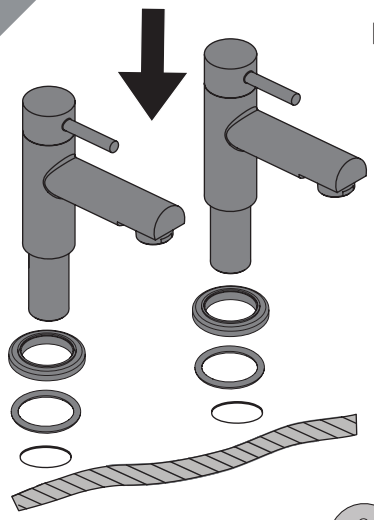

Feed the tap body through the bath/basin and ensure plinth and plinth seals are in place.

Your taps may come with plinths and will either be included pre-attached or loose in the box

1*

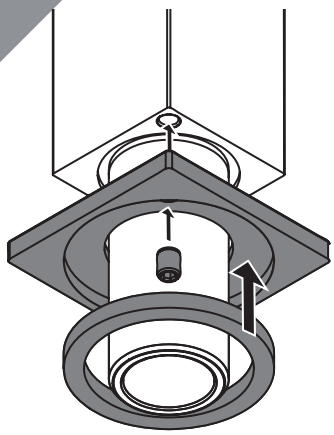

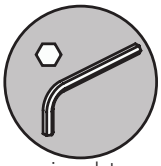

You may be required to secure the plinth to the tap with a grub screw.

If the hole is not directly visible on the plinth, check underneath rubber seal

Ensure rubber seal is in place once plinth is attached

2

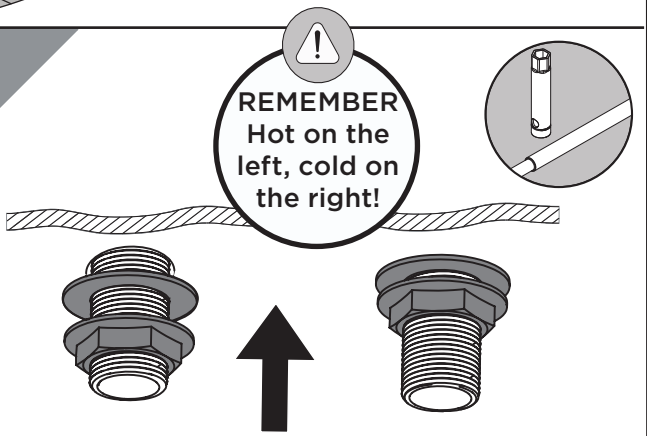

Secure the taps to the basin/bath by using the washer and metal backnut below the basin/bath.

3

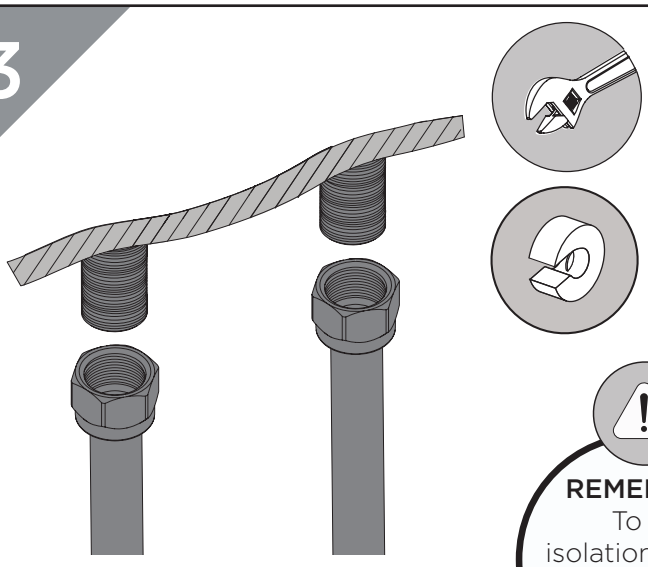

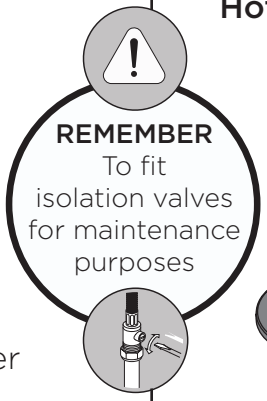

Connect the hot and cold water supplies to the threaded tails.

4

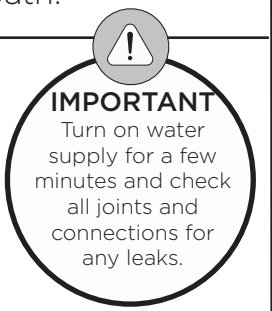

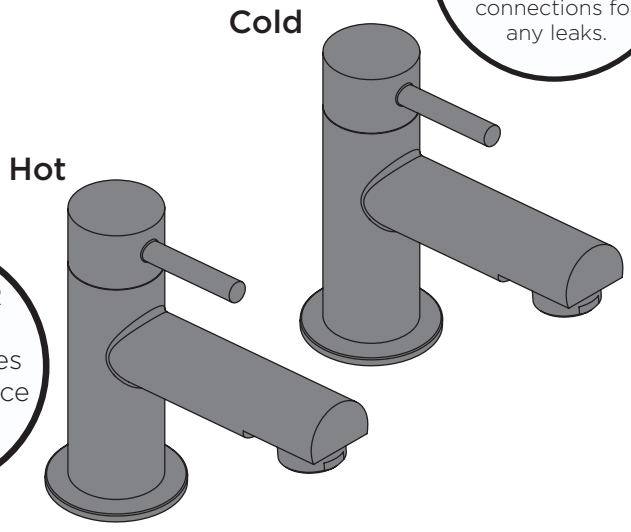

Maintenance - Valve Replacement

PLEASE NOTE - Taps shown in these instructions are for illustration purposes only. All taps can be maintained using these instructions.

1

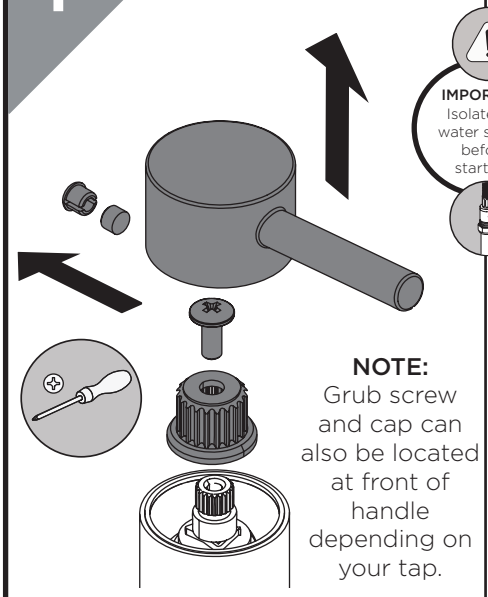

NOTE:
Grub screw and cap can also be located at front of handle depending on your tap.

Remove the handles depending on the style of your tap, including any spline adaptors if used.

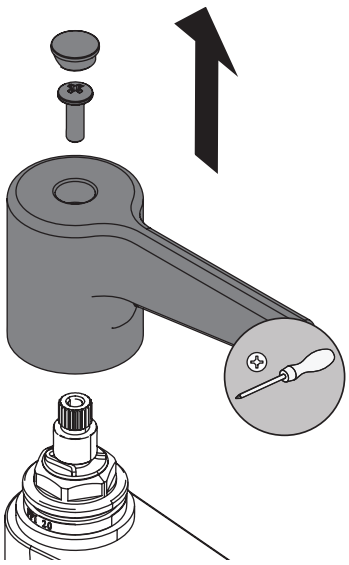

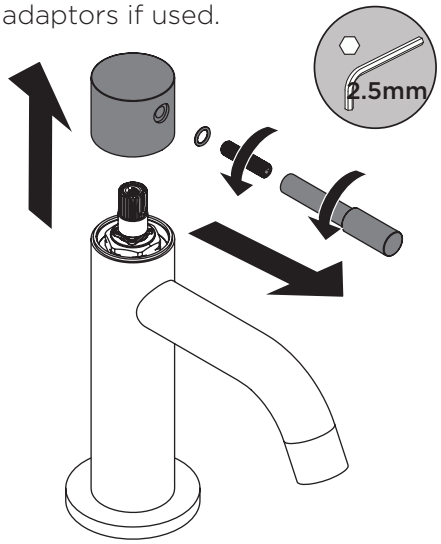

Unscrew peg lever by hand, then remove the threaded rod with hex key.

2

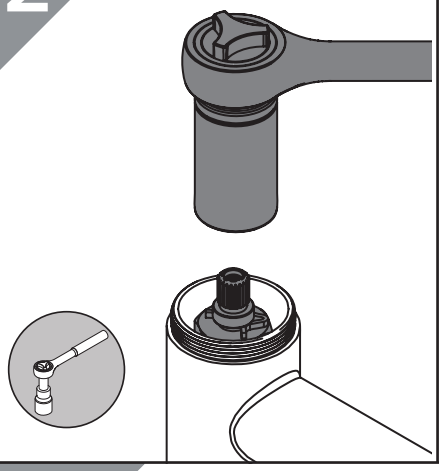

Remove the valve using the tool required for your tap. Check any seals and O-rings for damage. Replace valve if necessary.

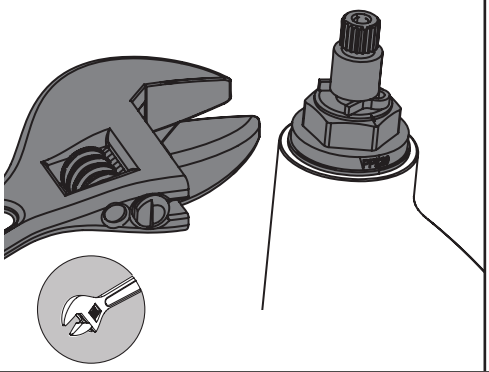

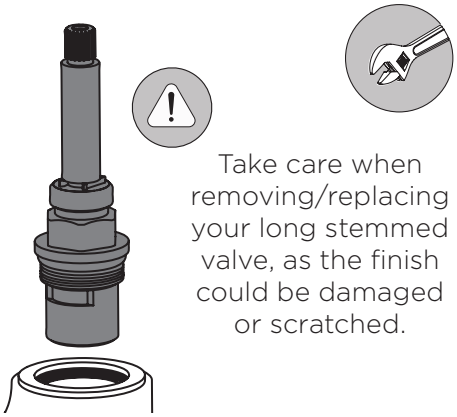

Take care when removing/replacing your long stemmed valve, as the finish could be damaged or scratched.

3

Visit **www.bristan.com** or scan the QR Code and search for your product code to replace the cartridge for your tap.

4

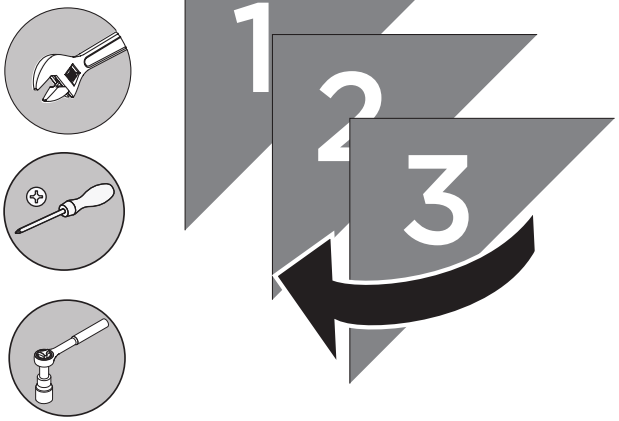

Reverse the steps to replace the valves and handles.

Maintenance - Clean/Replace Outlet

PLEASE NOTE - Taps shown in these instructions are for illustration purposes only. All Taps can be maintained using these instructions.

1a Housed Outlet

Using an adjustable spanner, unscrew gently to remove the outlet

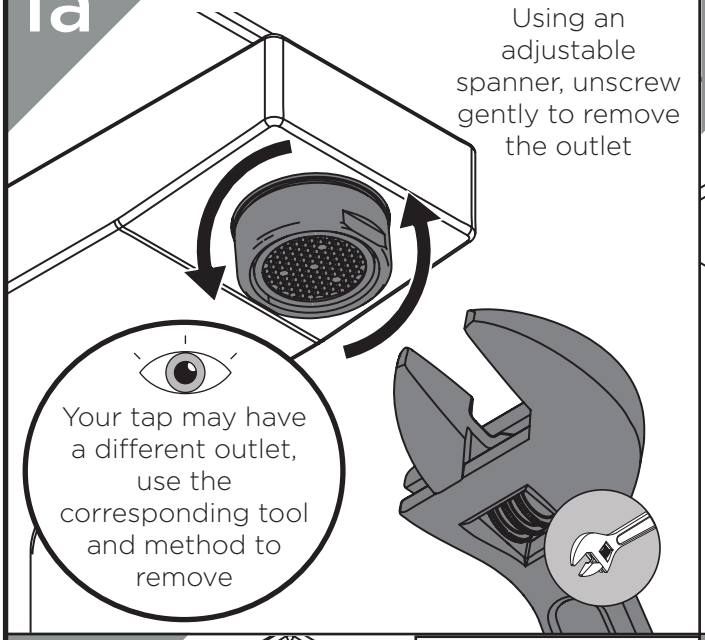

Your tap may have a different outlet, use the corresponding tool and method to remove

1b Recessed Outlet

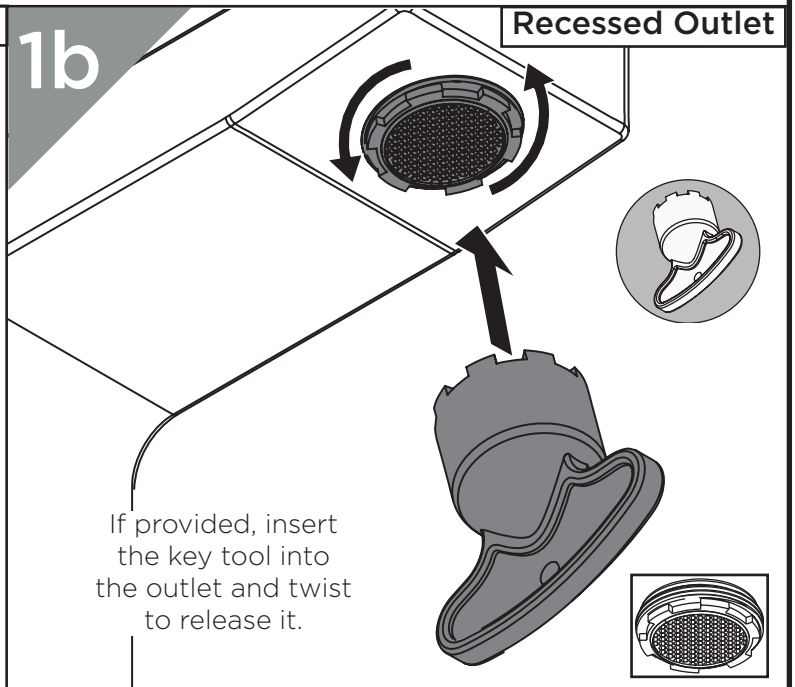

If provided, insert the key tool into the outlet and twist to release it.

1c Coin Slot Outlet

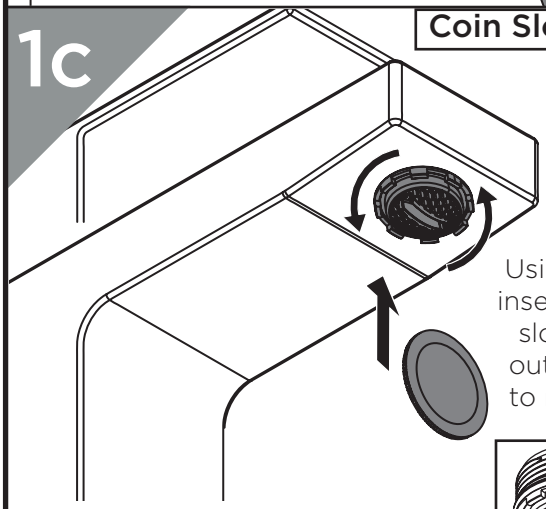

Using a coin, insert into the slot on the outlet. Twist to release it.

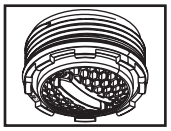

1d Fixed Outlet

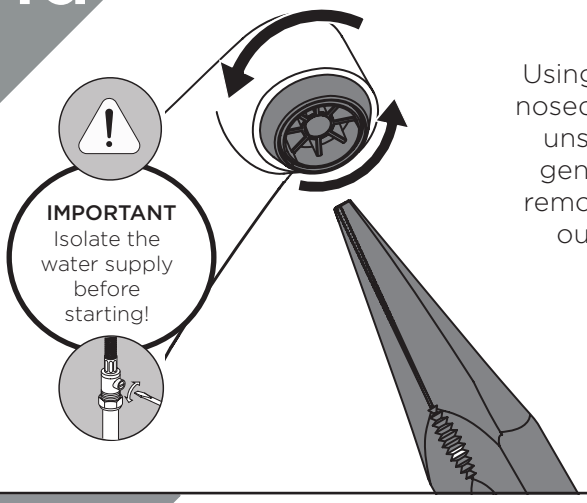

Using long-nosed pliers, unscrew gently to remove the outlet.

2

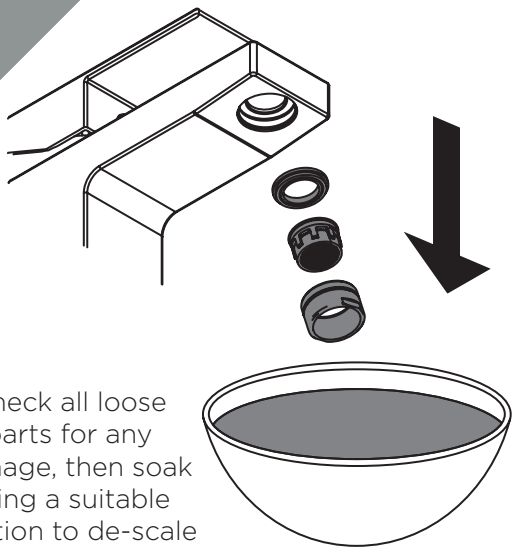

Check all loose parts for any damage, then soak using a suitable solution to de-scale

3



Reverse the steps to replace the outlet

Troubleshooting

Symptom	Cause	Remedy
No flow or low flow rate	Partially closed isolation valve.	Open isolation valve.
	Head of water is below the minimum distance required.	Refer to specification for minimum distance required.
	Hot or cold water being drawn off elsewhere causing pressure changes or instantaneous boiler temperature changes.	Do not use other water outlets when using the taps.
	Airlock or partial blockage in the supply pipework.	Flush through pipework to ensure removal of debris and any airlocks.
Water dripping from taps	This is normal for a short time after using the taps.	This is caused by residual water tension, the build up of water in the tap body.
	If water continues to drip, possibly due to the ceramic disc valves.	Remove valves and clean, refer to 'Maintenance' section before starting any maintenance.
Taps do not turn on	Closed isolation valve.	Open isolation valve.
	Mains water supply turned off.	Turn on mains water supply.

General Cleaning

Bristan products are made from premium materials, with hand polished, electroplated, PVD or EPD finishes.

Your taps should be regularly cleaned with warm water, a mild pH-neutral liquid soap and polished with a soft cloth. Any residues from soap, toothpaste etc. can cause blemishes if not rinsed off straight after use.

Household bleaches and cleaners contain harsh chemicals and may damage the surface finish. Avoid using abrasive cloths, scouring pads, scrub sponges, steel wool or anything similar.

Contact Us

BRISTAN

Part of BRISTAN GROUP

Bristan Group Ltd.
A Masco Company

UK: Bristan Group,
Pooley Hall Drive,
Birch Coppice Business Park,
Dordon, Tamworth
B78 1SG.

EU: Masco Europe S.à.r.l.
14 Rue Strachen
6933 Mensdorf
Luxembourg

Email Us: enquire@bristan.com
Website: www.bristan.com
Call Us: +44330 026 6273

A Masco Company

Our Guarantee

At Bristan, we want to make things as easy as possible for our customers. That's why we offer solid guarantees on all our products, effective from the date of purchase, to give you peace of mind.

Your guarantee starts from the purchase of your product, but you can still benefit from registering it for easier identification in the unlikely event of a manufacturing fault, please visit **www.bristan.com/register**

For any other queries, please call Customer Service on 0330 026 6273 where our expert team of advisors will be able to offer you any help and advice.

For full guarantee terms and conditions visit **www.bristan.com/service-centre/guarantees**