RP3 OR BAS C

ORTA Tap Range
Orta Basin Mixer with Clicker Waste Chrome



Features:

- Save water without compromising performance thanks to the built-in 5L flow regulator.
- Supplied with everything you need for a hassle-free installation, including flexible tails and clicker waste
- Install with confidence using a robust metal fixing nut that keeps your tap securely in place
- Experience smooth, reliable operation thanks to the long-life ceramic cartridge
- Enjoy lasting brilliance with our flawless, scratch-resistant chrome finish that's salt spray tested for durability

Product Certifications:

WRAS APPROVED PRODUCT

WRAS Certification No: 2109917
WRAS Expiry Date: 30/09/2026

Unified Water Label 5 l/min

Specification

Product Type:	Bathroom Taps
Main Construction Material:	Brass; ABS; Stainless Steel
Mount Type:	Deck
Handle Type:	Lever
Connection Inlet:	1/2" BSP Flexible Tails
Connection Outlet:	M24 5lpm Flow Limited Aerator
Number of Tap Holes:	1
Valve/Cartridge Type:	35mm Single Lever Cartridge
Plumbing System Requirements:	Suitable for all plumbing systems
Minimum Dynamic Pressure (bar):	0.2 bar
Maximum Dynamic Pressure (bar):	5 bar
Maximum Hot Water Temperature °C:	60°C
Maximum Static Pressure (bar):	10 bar
Flow Type:	Single
Isolation Included:	No

Dimensions (measurements in mm)

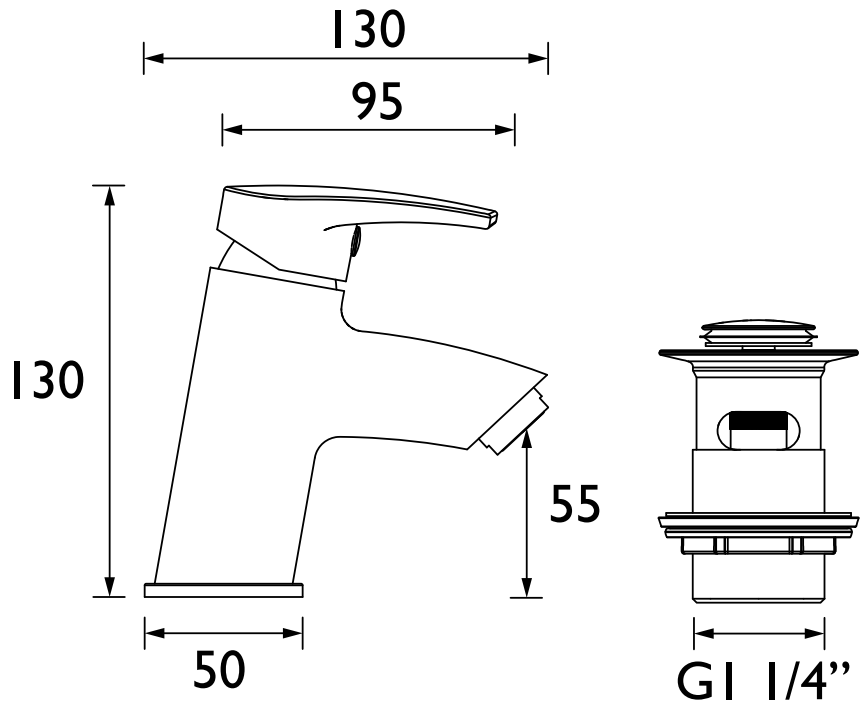

Flow Rates (l/min)

System Pressure (bar)	0.2	0.5	1	2	3	5
RP3 OR BAS C (mixed)	2	3.3	4.7	5.3	5	NPD

TECHNICAL DATA SHEET

LIFETIME GUARANTEE *

BRISTAN

D2

Bristan, Birch Coppice Business Park, Dordon, Tamworth, B78 1SG. Web Site: www.bristan.com Telephone: 0330 026 6273. Email: enquire@bristan.com.

* - **Lifetime guarantee applies to products purchased on or after 01/04/2026.** See www.bristan.com/guarantees for more information. The information contained on this page was correct at date of issue. Listed flow rates are indicative for the product. Different plumbing systems and flow regulators can produce higher or lower results. Fitting Dimensions are provided as a guide only. Some variation may occur due to manufacturing tolerances. Bristan pursues a policy of continuous improvement in design and performance of its products and so reserves the right to change specifications without prior notice.