RP3 CNN EFSNK C

CINNAMON Tap Range
Cinnamon Easyfit Monobloc
Sink Mixer Chrome



Specification

Product Type:	Kitchen Taps
Main Construction Material:	Brass
Mount Type:	Deck
Maximum Worktop Depth (mm):	35
Handle Type:	Lever
Connection Inlet:	1/2" BSP Flexible Tails with Isolation Valves
Connection Outlet:	M24 Aerator
Number of Tap Holes:	1
Valve/Cartridge Type:	35mm Single Lever Cartridge
Plumbing System Requirements:	Suitable for all plumbing systems, ideally balanced
Minimum Dynamic Pressure (bar):	0.3 bar
Maximum Dynamic Pressure (bar):	5 bar
Maximum Hot Water Temperature °C:	60°C
Maximum Static Pressure (bar):	10 bar
Flow Type:	Single
Isolation Included:	Yes

Features:

- Install your tap in minutes from above the sink, thanks to the innovative Top Fix Easyfit technology
- Easily repair, maintain or replace your kitchen tap using the two isolation valves that let you shut off the water supply at the base
- Supplied with everything you need for a hassle-free installation, including two Allen keys, isolation valves, Top Fix Easyfit base, and flexi tails
- Rinse and reach with ease using the convenient swivel spout
- Install with confidence, thanks to the high quality metal fixings that keep your tap securely in place

Dimensions (measurements in mm)

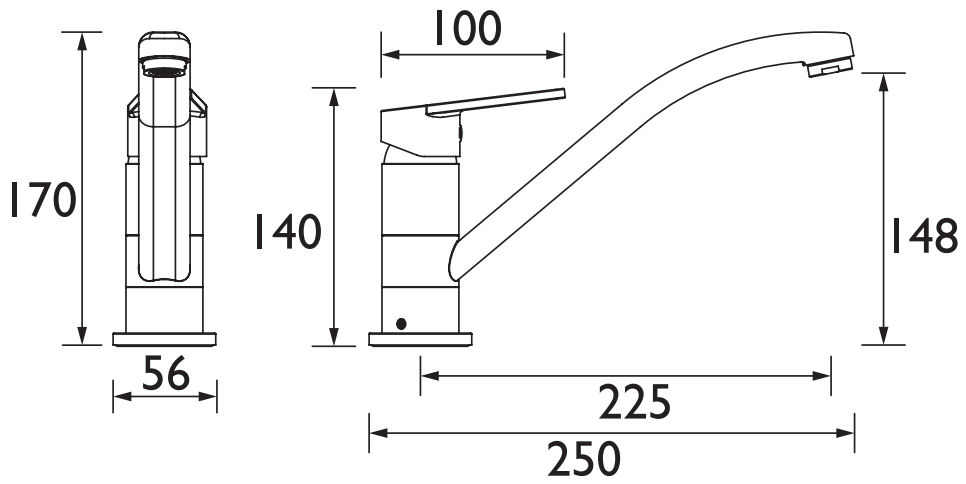

Product Certifications:

WRAS Certificate No: 240903008
WRAS Expiry Date: 30/09/2029

Unified Water Label 19.2 l/min

Flow Rates (l/min)

System Pressure (bar)	0.3	0.5	1	2	3	5
CNN EFSNK C (mixed)	5.3	7.2	10.8	15.5	19.2	25.1

TECHNICAL DATA SHEET

LIFETIME GUARANTEE*

BRISTAN

D2

Bristan, Birch Coppice Business Park, Dordon, Tamworth, B78 1SG. Web Site: www.bristan.com Telephone: 0330 026 6273. Email: enquire@bristan.com.

* - **Lifetime guarantee applies to products purchased on or after 01/04/2026.** See www.bristan.com/guarantees for more information. The information contained on this page was correct at date of issue. Listed flow rates are indicative for the product. Different plumbing systems and flow regulators can produce higher or lower results. Fitting Dimensions are provided as a guide only. Some variation may occur due to manufacturing tolerances. Bristan pursues a policy of continuous improvement in design and performance of its products and so reserves the right to change specifications without prior notice.