AQUALISA®

eSERIES

INSTALLATION AND USER GUIDE

Contents

Specifications **3**
Important Information **4**
Safety Information 4
Pipework Connections 5
Isolating Valves 5
Siting 5
Pressures 6
Flushing 7
Pressure Relief Device (PRD) 7
Inspection and Maintenance 7
After Installation 7
Declaration of Conformity 7
Positioning Guideline 8
Components 9
Installation Check List 10

About your Shower **12**
Fitting the Shower to the Wall **12**
Pipework Connection 14
Electrical Installation 17
Mains Voltage Connection 18
Electrical Rating 20
Wiring Connection 21
Earth Bonding 22
Fitting the Front Cover and Trim 23

Fitting the Shower Head and Rail **24**
Commissioning Instructions **26**
Troubleshooting Checklist for the Installer **28**
Important Safety Information **30**
User Instructions **31**
Cleaning and Maintenance **33**
Troubleshooting and Frequently Asked Questions **34**
Fault Codes **37**
Low pressure indicator through display 37
Over temperature protection 37

Specifications

Plumbing Connections

Inlet connection: 15mm male spigot
15mm compression or push fit elbow (not supplied)
Outlet connection: 1/2” BSP male threaded

Water inlet entry points

Left hand side: Top, Bottom or Rear/Side
Right hand side: Top, Bottom or Rear/Side

Operating Pressures

Minimum working pressure: 0.085 MPa (0.85 bar) Recommended: 1 bar
Maximum working pressure: 1.0 MPa (10 bar)
Static pressure range: 0 - 1 .0 MPa (0 - 10 bar)

Supply Requirements

Minimum inlet water temperature: 5°C
Maximum inlet water temperature: 20°C*
***Dependent on the selected power setting of the shower (❄, I, II, III)**

System Requirements

Suitable for mains cold water pressure only

Electrical cable entry points

Left hand side: Top, Bottom or Rear
Right hand side: Top, Bottom or Rear

Dimensions

Height: 379mm
Width: 244mm
Depth: 86mm

Important Information

SAFETY INFORMATION

This appliance can be used by children aged from 3 years and above and persons with reduced physical, sensory or mental capabilities or lack of experience and knowledge if they have been given supervision or instruction concerning use of the appliance in a safe way and understand the hazards involved.

- Children shall not play with the appliance.
- Cleaning and user maintenance shall not be made by children without supervision.
- The spray head must be descaled regularly.
- **WARNING:** Do not switch on if there is a possibility that the water in the heater is frozen.
- This appliance is intended to be permanently connected to the water mains and not connected by a hose set.
- Fit only shower heads recommended by the manufacturer and never fit any additional device to restrict the water outlet flow.

A suitable double pole isolation switch for supply disconnections must be incorporated in the fixed wiring circuit, in accordance with current wiring rules. See Electrical Installation section for further details.
This product must be installed by a competent person in accordance with all relevant current Water Supply Regulations.

All showers requiring an electrical connection must be installed by a qualified person following the latest revision of BS7671 (wiring regulations) and certified to current building regulations. With reference to building regulation Part P, any new installation or replacement product installation which is not identical to the product being replaced, the cable sizes, circuit protective devices, earth bonding and all other requirements of the building regulation must be assessed by a (registered) qualified electrician and installed in consideration to the site conditions.

(See pages 19 and 20).

PIPEWORK CONNECTIONS

Aqualisa eSERIES showers are suitable for use with 15mm British Standard pipe and should be connected using a 15mm compression or push fit elbow fitting (not supplied). All models are suitable for top, bottom, rear and side entry pipework and top, bottom or rear entry cable. Supply lines should be flushed clear of any debris prior to installation of the unit.

Plastic pipe may be used (with appropriate inserts) if certified by the plastic pipe manufacturer for use with compression fittings.

Plastic pipe inserts can be very restrictive. Where used the pressure / flow requirements detailed in the pressures section must be met.

Pipe runs in the loft or behind radiators should be avoided.

DO NOT use solid setting infill material or non-demountable fittings/requires a tool to remove, or soldered joint to connect.

We know that installers have their favoured plumbing connections. Below are guidelines to ensure you select the right one:

- Size: 15mm
- 15mm Compression or push fit elbow (not supplied)
- Suitable for Copper, PE, PEX pipework
- Operating pressure - up to 10 bar

This connection MUST be sited in a position that is safely accessible for commissioning, servicing and maintenance purposes. Failure to meet these requirements will invalidate the warranty.

ISOLATING VALVES

A suitable full bore isolation valve must be fitted between the rising main and the unit in accordance with the current Water Supply Regulations, our terms of warranty and to allow for routine maintenance and servicing.

SITING

Refer to positioning guideline (page 8). The Aqualisa Lumi+ unit must be mounted on a flat, vertical finished wall with the hose outlet pointing downwards. Any distortion of the back plate may result in the unit not working and the front cover not fitting correctly. Pillar spacers are supplied to accommodate uneven surfaces and assist in aligning pipework connection on retrofit installations. (See page 13).

Under no circumstances should this shower unit be recessed, tiled up to or sealed around as this prevents air circulating and any condensation escaping. It **MUST** be fitted onto a flat finished wall surface.

The casing must not be sited where it is subject to continuous spray from the shower head. Refer to Positioning Guideline, (page 8).

- The unit must not be sited where it is likely to freeze.
- The rail system must be sited in a position where the hose, when connected to the shower unit is not stretched or kinked.

Warning do not switch the shower on if there is a possibility that the shower could be frozen. If you have switched the shower on, switch off immediately. Please refer to the trouble shooting guide.

PRESSURES

Check that the supplied dynamic (running) water pressure to the electric shower is adequate.

The required supplied dynamic (running) pressure is:-

Maximum 1.0MPa (10 bar)

Minimum 0.085MPa (0.85 bar) - recommended 1 bar at a flow rate of 8 litres per minute.

Note: For the 9.5kW and 10.5kW models, the minimum running pressure must be obtained at a flow rate of 9 L/min.

Where pressures are likely to exceed 1.0MPa (10 bar), a pressure reducing valve must be fitted to the incoming mains supply. A setting of 0.3MPa (3 bar) is recommended. It should be noted that daytime pressures approaching 8 bar can rise above the stated maximum.

Where possible avoid connecting the shower unit where it will be affected by water drawn off by other appliances, example the mains feed to a toilet as this may cause a drop in pressure to a level that is too low for the shower unit to work correctly.

The use of other services connected to the same water supply as the shower unit may cause the water pressure to drop below the minimum required, this should therefore be taken into consideration.

Note: models of electric showers can differ in performance; if your previous electric shower had a lower output flow rate, then this may have produced a higher dynamic pressure at the shower head.

FLUSHING

Some modern fluxes can be extremely corrosive and, if left in contact, will attack the working parts of this unit. All soldering must be completed and the pipework thoroughly flushed out in accordance with current Water Supply Regulations prior to connection of the product.

PRESSURE RELIEF DEVICE (PRD)

To meet European standards, the shower unit features an integral pressure relief device (PRD).

DO NOT operate the shower with a damaged or kinked hose or blocked shower head, as this can cause the PRD to operate. Failure to follow this instruction will invalidate the guarantee.

The shower will only function correctly with the hose and handset provided (see shower head installation instructions on page 24). Failure to do so may result in the operation of the PRD and will invalidate the guarantee.

Please fully commission the shower prior to use following the shower commissioning procedure detailed on page 28. Failure to do so could cause the PRD to operate and will invalidate the guarantee.

The shower unit must be sited over a bath or shower tray as in the event of the PRD operating, water will drain from the bottom of the shower unit

INSPECTION AND MAINTENANCE

In the interests of safety, we recommend the unit and its electrical installation are checked by a qualified electrician in accordance with BS7671.

Cleaning the filter should only be completed by a qualified person.

Please refer to the instructions of how to clean the filter on page 33.

AFTER INSTALLATION

Familiarise the end user with the operation of this product and hand them this guide. Register the guarantee by; scanning the QR code, online at **www.aqualisa.co.uk/guarantee** or by calling 01959 560010.

DECLARATION OF CONFORMITY

Aqualisa Products Limited declares that the Aqualisa Lumi+ complies with the essential requirements and other relevant provisions of the Low Voltage Directive (2014/35/EU) and the EMC Directive (2014/30/EU).

The PRD provides a degree of shower unit protection should an excessive build up of pressure occur within the shower.

POSITIONING GUIDELINE

Water regulations stipulate that the shower head be constrained by a fixed or sliding attachment (hose retainer) so that it can only discharge water at a point not less than 20mm above the spill over level of the bath or shower tray or other fixed appliance.

If a shower head can sit within a bath, basin or shower tray, you must fit a double check valve in the supply pipework to prevent back siphonage. If the shower head can sit within a WC then the air gap should be a type AUK3 not less than 20mm or twice the diameter of the inlet pipe to the fitting, whichever is the greater.

This product must be installed by a competent person in accordance with all current Water Supply Regulations.

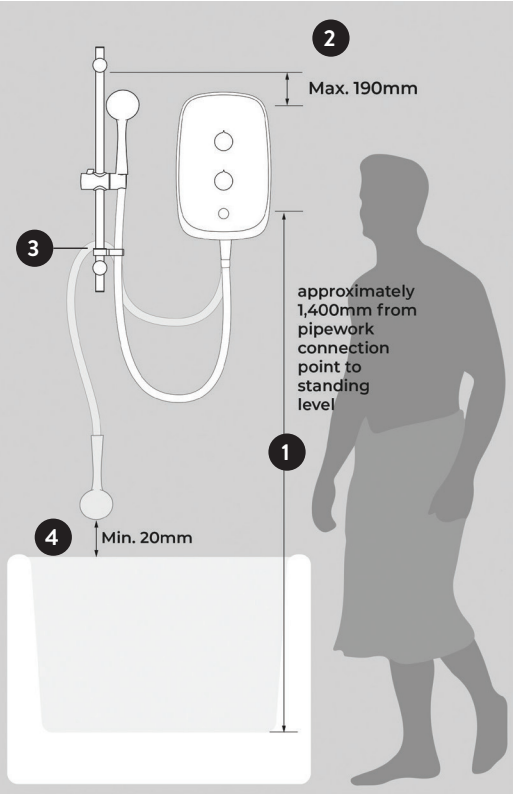

APPENDIX

The depth/height of the shower tray or bath must be taken into consideration when completing first fix.

- Based on an average person height of 1,750mm), the pipework connection point for the shower will be approximately 1,400mm from standing level in the shower tray or bath.
- Distance between top rail bracket and top of the shower unit is a maximum of 190mm.
- Distance between the bath or shower tray spillover and the lowest possible head position is 20mm minimum.

COMPONENT

NO.	DESCRIPTION	QTY
1	Electric Shower Unit	1
2	Pillar Spacers	3
3	Wall Plugs - shower unit	3
4	Fixing Screws - shower unit	3
5	Shower Hose - metal	1
6	Hose Restraint	1
7	Handset Holder	1
8	Rail	1
9	Wall Plugs - rail brackets	2
10	Fixing Screws - rail brackets	2
11	Rail Brackets and Caps	2
12	Handset - 110mm 3 mode	1

INSTALLATION CHECK LIST

- ☐ Check that the water supply meets the specification requirements
- ☐ Check that water and cable entry points of the unit are suitable for the installation requirements. (Refer to page 3- Specifications)
- ☐ Check that the electric supply meets the specification requirements
- ☐ Select a suitable position for the shower
  - making reference to the Positioning Guideline
- ☐ Follow plumbing installation section
- ☐ Follow electrical installation section
- ☐ Fit to the wall and connect the shower supplies
- ☐ Commission the shower in the way described following the guidelines
- ☐ Fit the front cover and aligning the controls
- ☐ Familiarise the user with operation of the shower and its functions

In addition to this installation guide it is essential that the written instructions are read and understood and that you have all the necessary components before commencing installation. Failure to install the product in accordance with these instructions may adversely affect the warranty terms and conditions.
DO NOT undertake any part of this installation unless you are qualified to do so. Prior to starting, ensure that you are familiar with the necessary plumbing and electrical regulations and legislation required to install the product correctly and safely.

Our products are supplied with universal fittings intended to secure the unit to a suitable wall.

Aqualisa Showers reserves the right to revoke the terms of the warranty should access to the service connections be denied by the use of solid setting infill material or non demountable fittings.

The water inlet of this appliance shall not be connected to inlet water obtained from any other water heating system.

To comply with water regulations, building regulations or any specific local water company regulations and in accordance with BS EN 806 a double check valve should be fitted where it is possible that the shower head may come into contact with user water, for example in the bath or a shower tray. Refer to page 8.

Check there are no hidden cables or pipes before drilling holes for the wall plugs. Choose a flat section of wall to avoid the possibility of distorting the back plate and making the front cover a poor fit. Exercise great care when using power tools near water. The use of a residual current device (RCD) is recommended.

Before connecting the water supply to the shower unit the water supply should be flushed out to remove all debris. After flushing the pipework make the connection to shower inlet and ensure the shower is positioned squarely on the wall and all fixing screws are tightened.

Ensure that the terminal block screws are fully tightened and no cable insulation is trapped under screws and tighten periodically in accordance with BS7671. The earth continuity conductor of the electrical installation must be effectively connected to all exposed metal parts of other appliances and services in the room in which the shower unit is installed to conform with BS 7671. The unused supply terminal block must not be used for any other purpose.

Ensure that commissioning instructions are followed in the correct order, (i.e. The top control knob is on the cold setting when commencing commissioning process).

The shower unit **MUST** be full of water before the heat settings are changed.

The shower unit **MUST** be fitted with a WRAS (Water Regulations Advice Scheme) listed mains water isolating valve.

About your shower

Aqualisa eSERIES models are surface mounted instantaneous electric shower units which are available in a choice of performance ratings – 8.5kW, 9.5kW and 10.5kW. available in Arctic White, Space Grey and Midnight Black finishes.

Aqualisa eSERIES electric showers provide endless economical showering as it imposes no demand on stored hot water.

Aqualisa eSERIES products are supplied complete with a 1 year guarantee that can be upgraded by registering the product with Aqualisa.

See **www.aqualisa.co.uk/guarantee** for details.

Fitting the Shower to the Wall

DO NOT use solid setting infill material or non-demountable fittings/requires a tool to remove, or soldered joint to connect.

We know that installers have their favoured plumbing connections. Below are guidelines to ensure you select the right one:

- Size: 15mm
- 15mm Compression or push fit elbow (not supplied)
- Suitable for Copper, PE, PEX pipework
- Operating pressure - up to 10 bar

This connection MUST be sited in a position that is safely accessible for commissioning, servicing and maintenance purposes. Failure to meet these requirements will invalidate the warranty.

Plumbers jointing compound must not be used. In instances of difficult joints use P.T.F.E. tape or similar. The use of jointing compound will invalidate the product guarantee. **DO NOT** solder fittings near the shower unit as heat can damage the shower components.

Complete all plumbing connections before making the electrical connections. Refer to the Positioning Guidelines image prior to choosing the location for the shower.

1

Remove the warning label and outlet bung from the unit.

2

Prior to removing the trim and front cover. Set the temperature dial to the full cold position and the heat setting dial to ❄. This is to ensure correct alignment during reassembly. Ensure the internal flow/temperature control mechanism is not moved during assembly once the cover has been removed.

3

Using a flat bladed screwdriver remove the detachable trim to reveal the six front cover fixing screws.

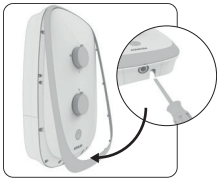

4

Remove the six front cover fixing screws and gently lift the cover forward to allow access to unplug the fly lead connectors.

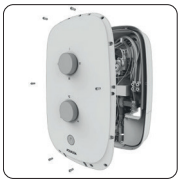

5

Unplug the two fly lead connectors from the front cover and place the cover aside.

Pillar spacers (2 x top, 1 x bottom) are supplied to accommodate uneven surfaces and assist in aligning pipework connection on retrofit installations. The spacers are to be positioned on the pillars of the backplate fixing points.

A piece of insulation or masking tape positioned where holes are to be drilled and before marking out the exact position for the fixing holes will help stop the drill bit from wandering, particularly on a tiled surface.

Check there are no hidden cables or pipes before drilling holes for wall plugs. Exercise great care when using power tools near water.

6

Hold the shower vertically against the wall, then ensuring it is square mark the top two fixing points only. (Arrows indicate all 4 points).

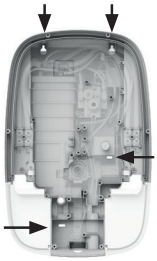

7

Carefully drill the top two holes as marked using a suitable drill bit. (If utilising the fixings provided then use a 6mm masonry drill). Make certain there are no pipes or wires behind the proposed holes.

8

Insert the wall plugs and screws provided leaving the screw heads proud by approximately 5mm. The shower can now be hung on these screws.

9

Ensuring that the shower is positioned vertically and square, mark one of the two lower fixing points. (fixing points shown in point 6, page 13).

10

Remove the unit then drill and prepare the lower fixing hole.

11

Re-hang the shower on the top fixings and fit the bottom screw to attach the unit to the wall. **DO NOT** fully tighten screws at this stage! The shower back plate and removable corners have moulded cut out sections which are clearly indicated to allow the chosen service entry option to be cut out prior to final fix.

Flush through the water supply pipe allowing it to discharge safely to waste and then ensure the water supply is correctly isolated.

PIPEWORK CONNECTION

1

Aqualisa eSERIES showers are suitable for use with 15mm British Standard pipe.

2

The shower back plate incorporates a removable section in the lower corner/s to allow easy access when deciding on and connecting to the water mains supply. (see image point 5, page 16).

i

Pillar spacers (2 x top, 1 x bottom) are supplied to assist in aligning pipework connection on retrofit installations. The spacers are to be positioned on the pillars of the back plate fixing points.

3

Remove the appropriate corner section giving access to the water inlet connection point.
Pipework entry options: Suitable for top, bottom, side, or rear.
Cable entry options: Top, bottom or rear (not side).

4

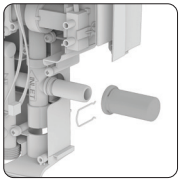

The connection to the unit is made using 15mm copper, stainless or plastic pipe and must be connected using a 15mm compression fitting or 15mm push fit elbow (not supplied).

Where required swap over the inlet blanking cap, so that the unused inlet is capped off.

This product is suitable for use with plastic pipe provided the manufacturer has certified suitability for use with compression fittings. The plastic pipe inserts **MUST** be fitted, however, as these can be very restrictive, they **MUST** meet the pressure/flow requirements of the product.

Some modern fluxes can be extremely corrosive and, if left to contact will attack the working parts of this unit. All soldering must be completed and pipework thoroughly flushed in accordance with current Water Supply Regulations prior to connection of the product.

Rear entry: The wall must be sufficiently chased out around the pipe and cable to allow room for the nut on the compression elbow to be recessed into the wall. Failure to do so will result in distorting the backplate and a poor fitting front cover. The pipework must be connected to the elbow prior to fitting the shower unit to the wall.

We recommend the use of a suitable sealant to seal around the incoming pipework to prevent water entering the wall.

IMPORTANT: DO NOT use excessive force when making the connection to the unit.

5

Having decided on the direction of the water inlet supply:
Top (falling), Bottom (rising) or rear/side inlet it is necessary to remove the appropriate knock out (thinned out plastic) cross section from the back plate.

IMPORTANT: Remember to replace the lower corner section before refitting the front cover and ensure the blanking cap and c-clip are fitted to the unused inlet.

Aqualisa eSERIES shown for illustrative purposes

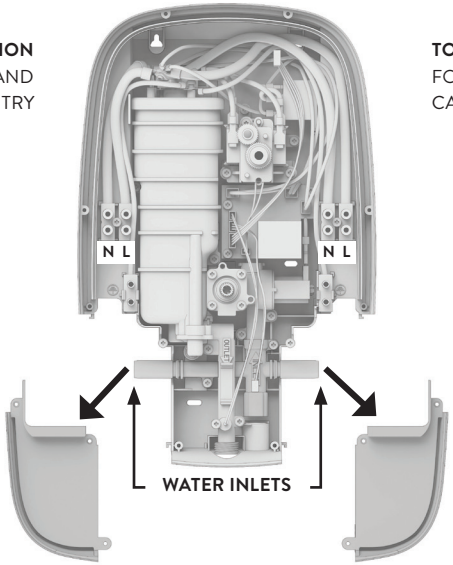

INLET BLANKING CAP AND C-CLIP

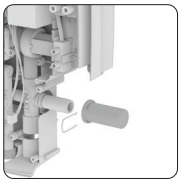

6

Tighten the back plate fixing screws so the unit is firmly and squarely fixed to the wall.

FINAL CHECKS

1

Tighten all plumbing connections, turn on the mains water supply and check for leaks, paying specific attention to the water inlet connection. At this stage, no water can flow through the shower unit. If all sound, turn off water supply to the unit.

2

Refit the lower corner section.

3

Installation must comply with water regulations, building regulations, any specific local water company regulations and should be in accordance with BS EN 806. A double check valve must be fitted with all flexible shower accessories where it is possible that the shower handset may come into contact with used water i.e. In the bath or shower tray.

ELECTRICAL INSTALLATION

BEFORE ANY ELECTRICAL CONNECTION IS ATTEMPTED, THE ELECTRICITY SUPPLY MUST BE TURNED OFF AT THE MAIN SWITCH. FAILURE TO DO SO COULD RESULT IN ELECTROCUTION

The electrical installation should be carried out by a qualified person in accordance with IEE (Institution of Electrical Engineers) wiring regulations (BS 7671)

THIS APPLIANCE MUST BE EARTHED. IN THE INTERESTS OF ELECTRICAL SAFETY, A 30mA RESIDUAL CURRENT DEVICE (RCD) SHOULD BE INSTALLED IN ALL UK 230-240V ELECTRIC SHOWERS AND PUMPED CIRCUITS. THIS MAY BE PART OF A CONSUMER UNIT OR A SEPARATE UNIT

A suitably rated double-pole isolating switch for supply disconnection must be incorporated in the fixed wiring circuit in accordance with current wiring rules. This must have a mechanical indicator showing when the switch is in the **OFF** position. A neon lamp alone is not sufficient. (See the electrical rating chart for minimum switch rating). If it is fitted in the bathroom it must be the

cord-operated type. The switch must be readily accessible and clearly identifiable in zone 3, i.e. at 0.6metres horizontally from the shower cubicle or edge of the bath, or located above zone 2 (i.e. adjacent to the shower cubicle or bath, but at least 2.25metres from the floor) as detailed below. This requirement does not apply to the pull cord from the switch.

Where shower cubicles are located in rooms other than bathrooms, any socket outlet in the room must be situated at least 3 metres from the shower cubicle and protected by a 30mA RCD.

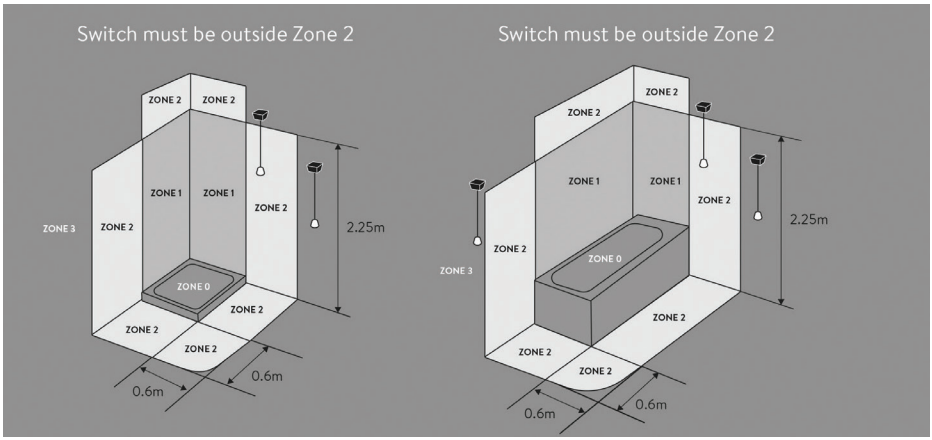

Your attention is also drawn to the safety information detailed within the important information section and the electrical rating section.

MAINS VOLTAGE CONNECTION

Please refer to the typical system diagram shown on page 19. The following notes are for guidance only – the installation must comply with current regulations. Please ensure you have read and understood the Electrical installation section on pages 17-18 prior to completing any electrical connections.

Before making electrical connections within the installation make sure that no terminal is live. If in doubt, switch off the whole installation at the consumer unit or switch fuse (where fitted).

1

The shower unit must only be connected to a 230-240V AC supply.

2

The shower unit must be connected to its own independent electrical circuit. It **MUST NOT** be connected to a ring main, spur, socket outlet or lighting circuit, otherwise the circuit will overheat.

IMPORTANT: The use of connections within the unit or other points in the shower circuit to supply power to other equipment such as an extractor fan or pump etc will invalidate the guarantee.

3

Check that the consumer unit (main fuse box):
a) Has a main switch rating of 80A or above and
b) Has a spare fuse way which will take the fuse/mcb (miniature circuit breaker) that you need to fit.

4

If so you can wire the shower direct to the consumer unit (please refer to the typical system diagram below).

5

(Not all consumer units accept a 35/40/45A sized fuse).

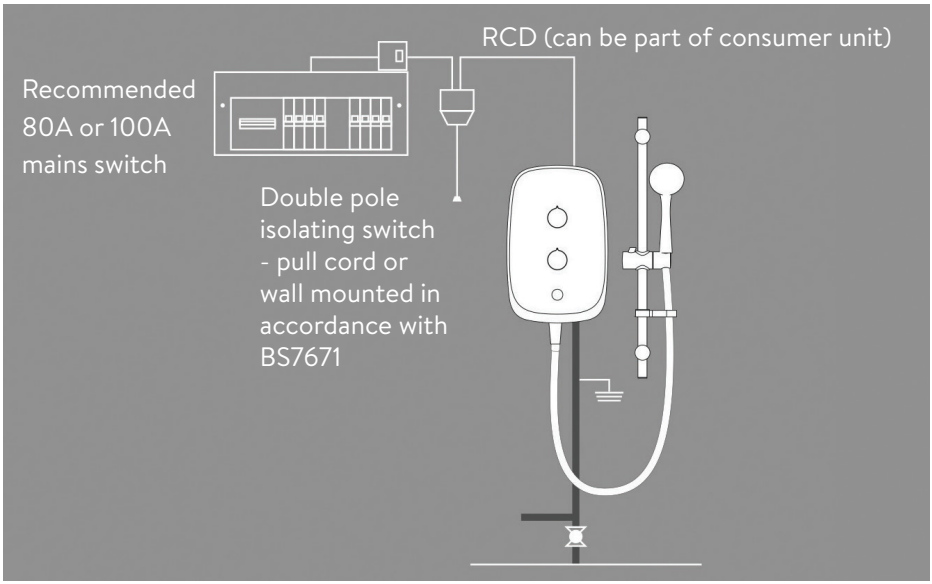

If the consumer unit has a rating below 80A or if there is no spare fuse way, then the installation will not be straightforward.

It may be necessary to install a new consumer unit to service the whole house or just the shower. A qualified person should install this. It may be necessary to contact the electricity supplier to upgrade the incoming supply.

ELECTRICAL RATING

Shower rating @ 240V		8.5kW		9.5kW		10.5kW	
Nominal current @ 240V		35.4A		39.6A		43.8A	
MCB rating		40A		40A		45/50A	
Cartridge Fuse		40/45A		40/45A		45A	
		Min cable size mm^2	Max cable run in m	Min cable size mm^2	Max cable run in m	Min cable size mm^2	Max cable run in m
Type of cable run	Installed in insulated wall	10	61	10	55	10	50
	Conduit or trunking	6	37	10	55	10	50
	Clipped direct or buried in uninsulated wall	6	37	6	33	10	50

Refer to the electrical rating diagram (shown above) to determine the nominal current of the shower. The current rating of the supply cable must be at least that of the shower itself. Use the chart to choose a fuse or mcb with a rating of less than that of your chosen cable.

The supply cable size is determined by the kW rating of the product (as shown on the rating plate fixed to the back plate) and the distance between the shower and the consumer unit. The table above is for guidance only but will help you choose the correct cable for your installation. If you are in any doubt consult an electrician.

If upgrading to a higher kW shower it is essential to ensure that the electrical circuit, including the wiring and isolating switches are adequate for the increased load.

Notes:

① Cable selection is dependant on de-rating factors detailed in the electrical rating section.

② In certain installations the combination of low voltage and extended cable lengths may result in loss of power and a consequential reduction in flow rates.

③ Cable sizes detailed are the minimum acceptable sizes. Sizes greater than these shown above may be used and should be used if cable runs are greater than indicated (above cable runs are based on a maximum 9.6V drop).

④ Rewirable fuses are not recommended and not covered by this table.
⑤ Installation should be carried out by a qualified person.
Please refer to BS7671 (Wiring Regulations) if in doubt.

Cables which are chased into the wall must be protected by the use of conduit or sheathing. Surface mounted cables must also be protected by a suitable approved conduit.

The current rating will be reduced if the cable is:

- Bunched with others.
- In an ambient temperature above 40°C.
- In an insulated wall or within thermal insulation, e.g. loft insulation.
- In any other unusual position.
- If in doubt about any aspect of electrical insulation, consult a qualified electrical engineer or the electricity supplier.

WE STRONGLY RECOMMEND NOT USING REWIRABLE FUSES.

WIRING CONNECTION

1

Connect as follows:
Earth cable to terminal marked: ⏚
Neutral cable to terminal marked: N
Live cable to terminal marked: L

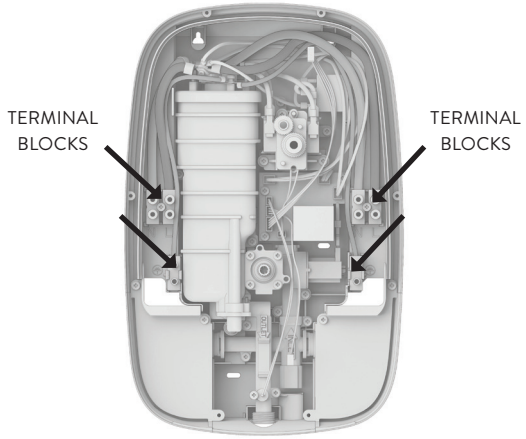

2

The outer sheath of the supply cable must be stripped back to a suitable length and the earth conductor must have an earthing sleeve fitted.

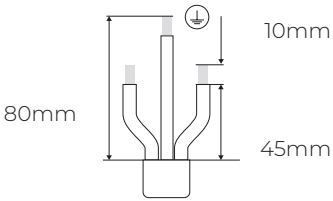

IMPORTANT: Follow the cable guidelines, to ensure the product has a reliable electrical connection.

3

Loosen the terminal block screws and insert the wires as indicated on the back plate moulding.

IMPORTANT: Ensure that the terminal block screws are fully tightened and that no cable insulation is trapped under screws. Tighten the screws periodically in accordance with BS 7671.

Failure to ensure that the retaining screws are tight could result in a failure of the terminal block and / or result in the cable overheating.

IMPORTANT: DO NOT switch on the electricity supply until the shower cover is fitted.

EARTH BONDING

The installation must be earth bonded in accordance with current regulations. The earth continuity conductor of the electrical installation must be effectively connected to all exposed metal parts of other appliances and services in the room in which the shower unit is installed to conform with BS 7671.
Where earth bonding of the premises is not evident, it may be necessary to run a bonding cable back to the earth terminal at the consumer unit.

FITTING THE FRONT COVER

IMPORTANT: Prior to fitting the front cover it is necessary to align the control knobs on the cover with the mating control spindles mounted on the back plate.
Ensure the seal is correctly located in groove of the backplate.

1

Rotate the power selector knob to the cold position (9 o'clock) ❄.

2

Rotate the temperature control knob anti-clockwise to the mechanical stop position (minimum temperature).

3

Ensure the keyway of the power selector spindle is pointing LEFT and the temperature spindle is rotated fully anti-clockwise (until it reaches the mechanical stop).

4

Where fitted, remove instruction card from spindle.

5

Plug in the two fly lead connectors to the front cover (see page 13 point 5 for images). Carefully fit the cover ensuring controls are aligned. **Note:** slight adjustment of the knobs may be required to locate cover and engage the spindle splines.

6

Secure the front cover to the back plate using the six fixing screws provided.

7

Add the trim on to the front cover, this will simply snap into place and is held on to the unit by magnets.

Fitting the Shower Head and Rail

Before commencing installation of the shower head rail assembly. Refer to the positioning guideline on page 8.

The shower head should be sited close to the shower unit, not necessarily on the same wall, but so that the unit is not subjected to continuous spray and ensuring the shower hose is not kinked or under strain.

The shower outlet, hose and handset act as a vent. They must not be blocked, obstructed or have connected to them any fitting not approved by Aqualisa Showers. The use of unapproved accessories may invalidate the guarantee and may affect the performance and safety of the unit.

A piece of insulating or masking tape applied to the wall before marking out the fixing holes will help stop the drill from wandering, particularly on tiled surfaces. When working near a basin or bath, insert the plug in the waste fitting so that small parts cannot be lost.

Check there are no hidden cables or pipes before drilling holes for wall plugs. Exercise great care when using power tools near water.

1

To fit the rail, prepare two fixing holes up to a maximum of 515mm apart, utilising the wall plugs supplied (if suitable).
Note: the rail kit supplied utilises a floatingbracket that can be positioned to suit existing screw holes on retrofit installations.

2

Remove covers from the rail brackets.

3

Secure the top rail bracket into position on the finished wall surface using the screw provided.

4

Depress the single release button of the handset holder and slide onto the rail assembly, ensuring above the hose restraint. Fit the hose restraint onto the rail.

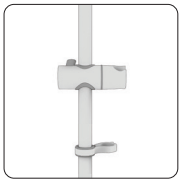

Lubricating the rail with water or washing up liquid will make it easier to fit these items.

5

Slide the bottom rail bracket onto the bottom of the rail.

6

Slide the rail assembly up through the top rail bracket.

7

Align the fixing hole of the bottom bracket with the corresponding holes on the rail assembly, ensuring the smaller sized hole on the rail is closest to the wall. Secure the bottom rail bracket to the wall using the screw provided.

8

Snap the rail end covers into both brackets.

9

Pass the hose through the hose restraint and firmly attach the shorter, conical end of flexible hose to shower handset making sure sealing washer is in place.

10

Firmly attach the flexible hose to shower unit making sure sealing washer is in place.

Commissioning Instructions

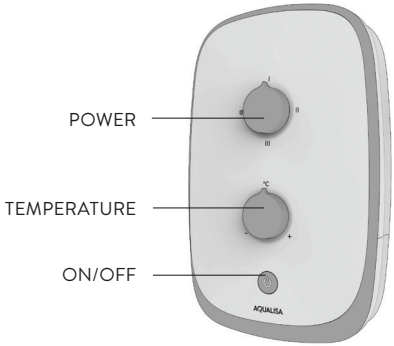

Ensure that the water supply is fully on at the mains stop cock and isolating service valve to the shower unit and check that water is not leaking from the bottom of the case. **DO NOT** turn on the electrical isolation switch until instructed in following steps. The shower unit must be full of water before heat (power) settings are used.

1

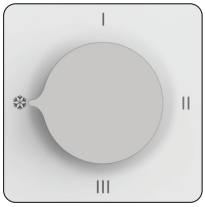

Turn power selector to the Cold setting

2

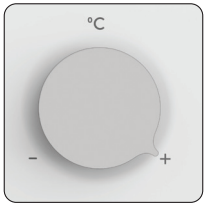

Rotate the temperature knob to max temperature position

3

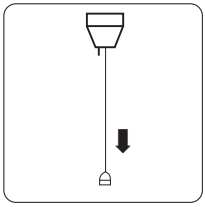

Switch on electrical supply

4

Push START/ STOP button

5

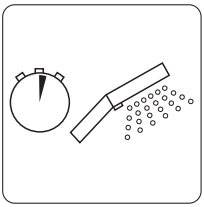

Check that water flows freely from the shower within a few seconds

6

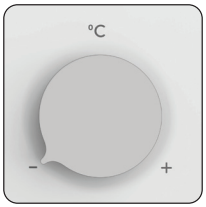

Slowly rotate temperature knob to minimum temperature position

7

Turn power selector to setting II and allow the water to warm. See point 10 for information about the display

8

Turn power selector to high power setting (III), the temperature will rise further

9

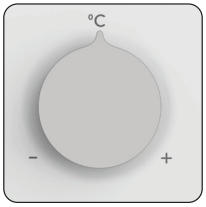

Slowly rotate temperature knob for hotter water, allowing time to stabilise

10

When the shower is started and begins to warm up the display will show as series of dashes, these will change / increase in appearance prior to a temperature reading being displayed.

11

Slowly adjust the control dial to set a comfortable showering temperature.

12

Push the start / stop button to switch the unit off.

13

Water will continue to run for approximately 6 seconds and the display will show a series of dashes, this is the phased shut-down sequence.

14

Switch off at the electrical isolation switch. **It is important the isolation switch is turned off when the shower is not in use.**

15

Finally we recommend that the shower head is removed to make sure no debris has worked into it. Clean and re-fit.

Troubleshooting Checklist for the Installer

IMPORTANT: The following check list is provided for the benefit of the qualified installer.

WARNING: SWITCH OFF THE ELECTRICAL ISOLATION SWITCH BEFORE REMOVING THE FRONT COVER TO MAKE CHECKS.

Q **Water not heating.**

A Check the circuit through the thermal cut out.Ensure water pressure sufficient to activate pressure switches. **Note:** test to be done using a low voltage resistance meter whilst the power is switched **OFF** at the isolating switch.Check working voltage. Ensure you have completed commissioning process and refer to installation checklist.

Q **Poor or no control over water flow.**

A Check for restrictions and blockages - head, hose and inlet filter.

Q **No water when start/stop button is pressed.**

A Check the water supply isolating valves are fully open.

Q **PRD (pressure relief device) has operated.**

A Verify the cause of the activation, blocked or damaged shower hose, restriction in the shower head or limescsale build up on the spray jets. Replace the PRD membrane.
(**Note:** this is not covered under the product guarantee.)

Q **Start/Stop button does not activate.**

A Check that the front cover is aligned correctly.
Ensure the back plate is on an even surface and is not distorted, check fixing points and that pipework connection is not twisting the unit.
Utilise the pillar spaces provided where required.

Q **Display not lighting up**

A Is the power supply turned on and are the fly leads connected from the unit to the front cover see pages 13 and 24.

Important Safety Information

IMPORTANT: The electrical isolation switch must be turned off when the shower is not in use. This appliance is not to be used as a potable water supply.

DO NOT operate the shower in the following circumstances:

- If the handset or shower hose becomes damaged. (If the handset or shower hose becomes damaged, contact Aqualisa Customer Service for a replacement).
- Water ceases to flow during use.
- Water has entered inside of the unit because of an incorrectly fitted cover.

DO NOT place items on top of the shower unit, for example soap, wash cloths, shampoo, or other such bottles. Liquid from these items could leak through the joint between the cover and back plate and damage the protective rubber seal.

DO NOT restrict the flow from the shower by placing the shower handset in direct contact with your body or any other object.

DO NOT use in-line flow regulators / limiters or device that limits the outlet flow, these will affect the safety and performance of the shower and will invalidate your guarantee.

HARD WATER / SCALE

The shower spray head **MUST** be cleaned regularly to remove scale and debris. The frequency of the cleaning will vary according to the local water quality.

Symptoms as a result of a blocked or restricted shower handset:

- Shower temperature too hot and unable to obtain a cooler setting.
- Temperature fluctuates from very hot to cold (thermal cut-out activating).

See page 33 for cleaning instructions.

WARNING: The outlet of the shower acts as a vent and must not be connected to anything other than the flexible shower hose and handset supplied or approved by the manufacturer.

User instructions

OPERATING THE SHOWER

① Switch on the electrical supply at the isolation switch.
Note: we advise to wait until the water has reached a stable warm temperature before standing under the spray from the shower handset.

② Push the start/ stop button to start the flow of water.

③ Select your power setting using the top rotary control.

There are four power settings:

COLD ❄

POWER 1 I

POWER 2 II

POWER 3 III

④ When the shower is started and begins to warm up the display will show as series of dashes, these will change / increase in appearance prior to a temperature reading being displayed.

POWER SETTINGS EXPLAINED

Power 3 setting:
This is the full power setting. Fine-tune the outlet temperature by adjusting the bottom rotary temperature control.

Power 1 and Power 2 settings:
These are the economy settings and normally used in the warmer seasons of the year or when a cooler shower is preferred. The outlet temperature can be fine-tuned by adjusting the bottom rotary temperature control.

Cold Setting:
When selected, the heating elements are not powered so the output water temperature from the shower will be the same at the ambient incoming mains water. Ambient water temperatures are warm in summer and colder in the winter months. **Note:** adjustment of the rotary temperature control on this setting will only alter the flow of water and not the output temperature.

IMPORTANT: When adjusting the temperature, the unit can take up to 20-30 seconds to stabilise and reach the newly selected temperature.

⑤ The temperature control knob alters the outlet temperature by increasing or reducing the flow rate of water over the heating element and through the shower unit.

To increase the temperature:
Turn the control knob clockwise, this will also decrease the flow.
To reduce the temperature:
Turn the control knob anticlockwise, this will also increase the flow.

Note: adjustment of the rotary temperature control will be necessary to account for seasonal changes to the incoming ambient water temperatures or due to varying user preferences. The shower can be switched on and off during by using the separate start/stop push button.

⑥ To turn off the shower unit push the start/stop button. Water will continue to run for approximately 6 seconds and the display will show a series of dashes, this is the phased shut-down sequence. This safety feature clears the hot water out of the shower unit.

Note: a small amount of water will be retained in the shower head after turning the shower off. This can take several minutes to drain out and may present itself in the form of post-shower dripping.

⑦ Switch off electricity supply at the isolation switch.
The power supply to the shower **MUST** be isolated when it is not in use.

SHOWER HEAD OPERATION

Never attempt to make any adjustment to the shower head by pulling on the shower hose.

To select the preferred height for the shower head, depress the release button on the handset holder and move the slider up or down the rail.

Angular adjustment is made by carefully but firmly pulling forwards or pushing back the shower head against the holder.

ADJUSTING THE SHOWER HANDSET

The shower handsets have three spray patterns. These modes are selected by rotating the spray plate clockwise or anticlockwise until the desired mode is selected, when rotating the spray plate you will hear an audible click indicating when the required mode is properly engaged.

Cleaning and Maintenance

IMPORTANT: Your Aqualisa eSERIES should be cleaned using only a soft cloth and washing up liquid

DO NOT USE ABRASIVE CLEANERS

To reduce the requirement for chemical descaling in hard water areas, the shower head incorporates rub clean teats. Any scale build up that may occur in any of the holes can be broken down by gently rubbing the flexible tips of the jets. This procedure should be completed regularly, as often as once a week in some hard water areas as scale build up can affect the spray pattern and cause the shower to perform poorly.

Should chemical descaling of the head become necessary, remove the shower head and fully immerse in a mild proprietary de-scale solution, ensure the head is rinsed with clean water before use.

It is imperative that descaling is carried out in accordance with the manufacturer's instructions, substances that are not suitable for plastics and electroplated surfaces must not be used. The shower hose and handset can only be replaced with genuine Aqualisa parts.

CLEANING THE FILTER

Cleaning the filter should only be completed by a qualified person.

IMPORTANT: Turn the shower electrical isolating switch off.

- Isolate the water supply to the shower.
- The inlet filter is located inside the water inlet housing.
- To gain access unscrew the filter cap from the bottom of the inlet housing.
- To reassemble, follow procedure in reverse.
- **DO NOT** over tighten the filter cap on reassembly.

Tip: Use a large flat-bladed screwdriver to undo the filter cap (anti-clockwise).

Troubleshooting and Frequently Asked Questions

IMPORTANT: Should removal of front cover be required, please seek the help of a qualified person.

Water too COLD

- Check the mains circuit breaker and/or fuse.
- Is the electrical isolation switch is turned on?
- Check the rotary power selector is set to high power (III).
- Adjust the rotary temperature control in the direction of the red graphic.
- Confirm that there is sufficient mains water pressure.
- Restart the shower on the high power setting.
- If the 1st stage thermal cut-out has activated, allow cold water to run through the unit to re-set the over temperature cut-out.
- If unable to rectify, contact Aqualisa Customer Service.

Display does not light up

- Ensure electrical supply to shower is turned switched on, including circuit breakers and fuses.
- If a new installation or the front cover has been removed - check that the fly leads are connected from the main unit to the front cover. See pages 13 and 24.

Water does not flow when start/stop button is pressed

- Check the water supply isolation valve to the shower unit is fully open.
- Check that the mains water supply (stop cock) is turned on and there is water at other mains water outlets.
- Ensure the front cover is correctly mounted on the back plate and all cover screws are fitted correctly.
- Ensure electrical supply to shower is turned switched on, including circuit breakers and fuses.

Water too HOT

- Reduce the temperature setting by adjusting the rotary temperature control.
- Ensure the shower handset spray jets are clear from scale deposits or any dirt or debris.
- Check that the hose in not damaged or kinked (restricting the flow).
- Check that the mains water isolation valve (stop cock) is fully open.
- Ensure the water isolating valve supplying the shower unit is fully open.
- Select a lower power setting.
- Check the inlet filter for signs or dirt or debris. (See cleaning and maintenance section)

Spray pattern from the handset is poor

Clean the spray plate (refer to cleaning and maintenance section). If the handset has multiple spray settings, select a different mode by rotating the spray plate.

Water is dripping from the bottom of the shower

The PRD - safety pressure relief may have operated. This will need to be replaced. Please contact Aqualisa Customer Service.

Check the inlet mains water connection. (This requires removing the front cover and should be done by a qualified person)

Note: if the pressure relief device (PRD) has operated check the hose and handset are **NOT** partially / fully blocked or damaged. For replacements, please contact Aqualisa Customer Service.

The shower filter and/or the handset keep getting blocked with debris

Following the initial installation and flushing through the pipework, there should not be debris present in your cold water supply or the shower unit. There is likely to be an issue with your pipework or water supply. Contact a plumber or your local water authority for advice.

The shower hose or handset are damaged or leaking

Contact Aqualisa Customer Service for a replacement.

The shower cycles from hot to cold

The shower temperature is set too high causing the thermal cut-out (safety device) to activate. Turn the temperature control knob anti-clockwise (towards blue markings), this will increase the flow of water. Gradually increase the temperature by turning the temperature control knob clockwise until a comfortable showering temperature is reached.

Note: it takes approximately 20-30 seconds for each adjustment to affect the water temperature. If the safety cut-out starts cycling again, then a Power 1 or Power 2 settings may need to be selected.

Ensure the shower handset spray jets are clear from scale deposits or any dirt or debris.

Check that the hose in not damaged or kinked (restricting the flow).

Unable to resolve the issue

Where the fault cannot be corrected by yourself or your installer,

DO NOT REMOVE THE UNIT FROM THE WALL

Contact the Customer Services Department who will assist over the telephone. If necessary, they can arrange a visit by a service engineer. We find most problems can be resolved by reference to these fitting instructions or by discussion over the telephone. In the event our engineer deems the fault to be caused by faulty installation, usage or lack of reasonable maintenance, a call out charge will be applied.

Fault Codes

Low pressure indicator

If the starting pressure is less than 0.7 bar then “LP” will flash on the dotmatrix.

Over temperature display

If extreme outlet temperatures are reached, above 50°C, over temperature will activate and the unit microswitch will deactivate.

When the temperature reduces back down to 45°C the microswitch will activate again.

The user needs to adjust the temperature dial to below 50°C in order to stop this safely.

Notes

AQUALISA®

PRODUCT FICHE

	eSERIES 8.5kW	eSERIES 9.5kW	eSERIES 10.5kW
Load Profile	XS	XS	XS
Energy Efficency Class	A	A	A
Energy Efficency (%)	38	38	38
Annual Energy Consumption (kWh/annum)	498	498	498
Sound Level (dB)	15	15	15
Annual Fuel Consumption (GJ/annum)	1.79	1.79	1.79
Precautions	All electric showers must be installed by a qualified person following the latest revision of BS 7671 (wiring regs) and certified to current building regulations		

AQUALISA®

Aqualisa® Products Limited
The Flyers Way
Westerham Kent TN16 1DE

Aqualisa International
Filip Williotstraat 9
2600 Antwerpen
Belguim

Customer Helpline: 01959 560010
Website: www.aqualisa.co.uk
Email: enquiries@aqualisa.co.uk
Warranty: www.aqualisa.co.uk/warranty

Republic of Ireland
Sales enquiries: 01-864-3363
Service enquiries: 01-844-3212

Please note that calls may be recorded for training and quality purposes.

The company reserves the right to alter, change or modify the product specifications without prior warning.

™ Trademark of Aqualisa® Products Limited.

Part No: 706565 Issue 04 Jan 26