Fires

B&Q

Shown: Elvington 5023539026360

Warm welcome

Getting the right look has never been easier with mix and match fires, surrounds, back panels and hearths. With prices to suit all budgets, a choice of styles to suit your home and quality products designed to last, no wonder we're the UK's national fires retailer.

A comprehensive range of fire products and accessories includes gas, electric and solid fuel fires, including insets, stoves and wall hung.

Spark some ideas

Not only is there a huge range of products to choose from, there's also loads of great help and advice, articles and videos to support and inspire you throughout your whole project see **diy.com/fires**

Help and advice

If you need assistance, please come into store, you'll get help with those accessories and extras that make all the difference – from surrounds, back panels and hearths, to handy decorative accessories.

Finance it your way

You can finance your entire project with a range of flexible finance options. For details, see **diy.com/finance**

In store or at your door

Click + Collect

Need it quick? Click + Collect is available on 1,000s of products.*

Home delivery

Don't move a muscle. Get your order at a time that suits you when you choose next day or named day delivery.**

Van hire

Use our Hertz 24/7 hourly van hire service to help you get your items home. Prices start at £15 per hour at participating stores.***

Prices correct as of 9 September 2022.

Prices and availability may have changed since the publication of this brochure. Customers are advised to check current prices online at diy.com before purchasing.

* Selected products are not available as part of our Click + Collect service. Available in selected stores only. Restrictions apply, see diy.com

** Delivery charges may apply, see page 91.

*** Participating stores only. Please visit our store locator at diy.com to see if your nearest store is participating. Terms and conditions apply, visit www.hertz247.com/bq for further details.

Bringing warmth to your home

Choosing your fire	06
Dimplex fires	08
Fireplace suites	12
Tall chimney breast fireplace suites	33
Wall hung fires	35
Stoves	46
Electric & gas stoves	47
Solid fuel stoves	58
Inset fires	60
Surround sets for stoves	66
Surround sets for inset fires	69
Back panels & hearths	74
Mix and match fire and surround sets	76
Create your own fireplace	83
Accessories	87

Your choice of fires

There's a wide variety of fires in our brochure, here's what you'll find –

Start on page 12

Fireplace suites

Fireplace suites give you a complete fireplace in one purchase, simply install against the wall and plug in. It includes your surround, back panel (when required), hearth and fire.

Start on page 35

Wall hung fires

Wall hung fires are quick and easy to install, with everything you need in one box. Electric wall hung fires simply hang and plug in. Gas wall hung fires should be installed by a Gas Safe registered engineer.

Start on page 46

Stoves

Stoves are available in gas, electric or solid fuel types. Electric stoves are portable, simply plug in and enjoy. Flueless gas stoves should be installed by a qualified professional. Solid fuel stoves are more efficient than open fires and are Ecodesign Ready 2022 compliant.

Start on page 60

Inset fires

Electric inset fires are easy to install as they don't require a chimney or flue. Whatever your flue type we have a solution to meet your gas inset fire requirements.

Start on page 66

Surrounds, back panels and hearths

Choose from painted, wood or micro marble, with a complete surround set. Or create your own look by choosing a surround, then adding a matching or contrasting back panel and hearth.

Start on page 76

Mix and match fire and surround sets

Whether you choose gas or electric there is a mix and match option for you. We've matched inset and stove fires with a selection of surround sets, but the final choice is yours.

Accessories - Start on page 97

Whether you want a log basket or a fully coordinated fireside set – you'll find it here.

Choosing your fire

There's lots of information in this brochure – plus there's more information at **diy.com/choosingtherightfire**

1. Which type of fuel will you use?

Gas

Clean and efficient a great source of heat for your home.

Look out for the green gas logo for our most energy efficient options, helping you control your energy bills.

All gas fires must be installed by a Gas Safe registered engineer. For more info go to www.gassaferegister.co.uk

Electric

Electric fires allow you to bring the warmth of a flame effect to a room with or without heat. A clean and instant alternative. Just plug in and go!

Solid fuel

Solid fuel, e.g. wood, coal etc, is an efficient solution that gives you the enjoyment of a real fire. Bring ambience and comfort to your home throughout the winter months.

All solid fuel stoves must be fitted in accordance with current regulations.

Choosing the right fuel for your solid fuel stove or open fire

Smoke controlled areas have been introduced into the UK by The Clean Air Act and are regulated by the Local Authorities. If you're unsure whether you live within one of these areas, please search online for latest advice from DEFRA or call 03459 335577.

- In smoke controlled areas, you need to ensure you're only burning approved smokeless fuels in your solid fuel stove or open fire. If it's a wood only burner, your appliance must be certified as DEFRA exempt and you must ensure you only burn dry wood with less than 20% moisture. Kiln dried wood is ideal for these types of stoves.
- Opting for a coal fire? You'll need to consider using a smokeless product so you're able to reduce the amount of air pollution emitted.
- No matter where you live, if you're burning wood fuel it'll be more effective and emit fewer pollutants if the logs are as dry as possible. To ensure this, it's best to store them in a log store or covered area with free air circulation.
- It's now a building regulation to have a carbon monoxide (CO) detector fitted in the same room as a solid fuel stove, log burner or open fire. However, for peace of mind, we recommend you fit one no matter what type of fire you have - old or new.

Features & controls

MC — Control type manual - The function controls are on the unit.

RC — Control type remote - Has a separate remote control for ease of use.

TC — Control type thermostatic - Thermostats switch heat on and off to maintain heat levels. This reduces the overall heat output required during use, helping you use less energy and reduce running costs.

SC — Control type slide - The control is located in an accessible position for easier lighting of the unit.

LED — LED bulbs use less energy than conventional bulbs.

2. Which chimney or flue type do you have?

Chimney or flue	Brick or stone (Class 1) • Older properties, typically pre 1960s • Traditional chimney, usually rise up out of the rooftop.	Pre-fabricated flue† (Class 2) • Newer properties built after 1960s • Metal flue pipe on the roof.	Pre-cast • Newer properties • Raised ridged tile or metal flue pipe on the roof • Shallower in depth compared to usual chimney.	No chimney • No chimney
Gas	●	●	●	●
Electric	●	●	●	●
Solid fuel	●			

3. Choosing your fireplace

One box solution

To create a simple yet stunning room update, choose from our fireplace suites (page 12) or wall hung (page 35) fires ranges. These provide a one-box solution and if you choose electric you can simply install against your wall, plug in and enjoy!

Mix and Match

Alternatively, choose from our range of stoves or inset fires and pair with a surround set to get the look you want.

For full customisation, create your own fireplace by selecting your fire, then adding a surround, back panel and hearth to build your own unique look. Have a look at our Mix and Match ideas on page 76-86.

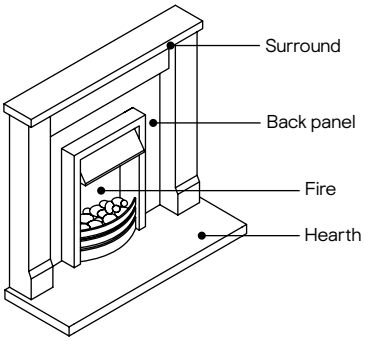

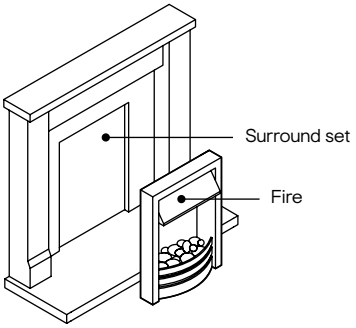

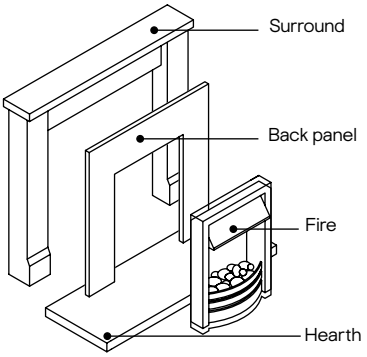

If you are unsure about the suitability of a fire and your intended location for it, you should check local Building Regulations. If in any doubt, or where required by law, consult a competent person who is registered with an electrical self certification scheme. †Some metal flue boxes are a wider 7" meaning you can have a Class 1 fire also. Some fires in this brochure are primarily designed to provide top up heat and are not intended as a primary heat source.

An Optimyst fire provides the beauty of a real fire with the simplicity of electric and will captivate you from the moment you see it.

The authentic three-dimensional flame and smoke effect is created by lights reflecting against ultra-fine filtered water mist, an illusion so realistic you will find it difficult to distinguish from the real thing. The flame effect can also be adjusted from gentle 'embers' to 'roaring flame' to give you the flame picture of your choice.

Optimyst is available in a selection of fires across freestanding stoves, insets, wall mounted fires and complete suites to enhance the ambience of any home. Please see these products featured in the relevant sections of this brochure.

Dimplex®

Why choose Optimyst?

Optimyst Stove

FREESTANDING ELECTRIC STOVE

PAGE 51

Burnham Optimyst Suite

ELECTRIC SUITE

PAGE 15

Optimyst Inset

INSET ELECTRIC FIRE

PAGE 62

Optimyst Wall Fire

WALL MOUNTED ELECTRIC FIRE

PAGE 37

Unique Optimyst effect

An authentic and unique three dimensional flame and smoke effect created by lights reflecting against ultra fine filtered water mist.

2kW heat output

Offering up to 2kW of heat via a fan heater.

Choice of 2 heat settings

A choice of 1kW or 2kW heat output helping control running costs.

Thermostat

Maintains the desired room temperature by automatically switching on and off.

Remote control

Operate the fire from the comfort of your armchair.

Fuel beds

Complete the look of a real fire with the log effect fuel bed.

Flame effect only

Enjoy the ambience of the flickering flame effect any time without the heat.

Easy to use

Simply plug in the fire, top up the water tank, and you are ready to go!

Design choice

Choose the model for your home from insets, stoves, suites & wall-mounted designs.

Helmsdale*

Dimplex®

Toluca Deluxe

Gorstan*

Cassia*

Optiflame®

Ignite your Imagination

Optiflame is our original flame effect which has been continually refined and improved since it revolutionised the electric fires market in 1988.

Optiflame uses the art of illusion with the flame effect being created from a reflecting surface, producing a series of seemingly random flickers that mimic the real thing to produce a convincing 2D flame effect that adds depth and comfort to any space.

Optiflame is available across a wide range of our fire styles, offering you a way to bring the luminescence of flame to any space.

Please see our range of Optiflame products featured in the relevant sections of this brochure.

Oakmead

*Surrounds not available at B&Q

Fireplace suites

Fireplace suites give you a stunning fireplace in one purchase, simply install against the wall and plug in.

Includes: Surround, back panel*, hearth and fire.
*Not all fireplace suites require a back panel

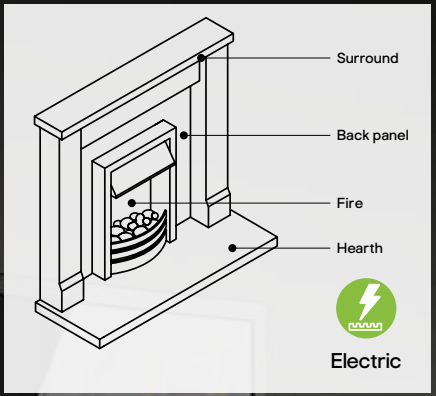

Bradbury

Electric

- Heat output adjustable low 0kW/high 2kW
- Front facing convected heat
- Eco flame
- 3 log flame effect settings
- 7 day timer
- Flat to wall installation
- No assembly required

H675 X W1280 X D330mm
White Ambience 5060534980747 **£630**
White 5060534980303

£610

1 year guarantee TC RC LED SUNCREST

Search for 'katell bradbury' on **diy.com**

- Contemporary low level, landscape, flat wall fixing
- 12x colour mood light
- Can use the flame effect only
- Eco Design compliant
- Clever smart remote control
- with numerous functions
- Remote daily or 7 day timer with integrated thermostat to adjust the heat to suit your requirements
- Remote has a draft feature - if a sudden drop of room temperature is detected the fire will turn off the heat immediately.

For individual manufacturer's guarantee terms and conditions see page 90.
For B&Q guarantee terms and conditions visit diy.com. Your legal rights are not affected.

Nightingale

Electric

- Heat output low 1kW/high 2kW
- Realistic glowing log bed, LED flame
- Front facing convected heat
- Flat to wall installation
- Under mantle lights

H1075 x W1220 x D360mm
Ash white 5030478715958

£780

LED bemodern®

Search for 'be modern nightingale' on **diy.com**

Charing

Electric

- Heat output low 0.9kW/high 1.8kW
- Front facing convected heat
- Glowing log bed
- Latest LED flame effect
- Adjustable brightness settings
- Flat to wall installation

H1150 x W1370 x D360mm
Ash white & oak effect 5030478717259

£740

LED bemodern®

Search for 'be modern charing' on **diy.com**

Selected products are available for home delivery only to selected locations, restrictions may apply. Delivery charges may apply.
For full details see diy.com/customer-support/delivery. **Prices correct as of 9 September 2022.**

Linford

Electric

- Heat output low 0.95kW/high 1.8kW
- Front facing convected heat
- Painted suite, cast iron effect stove
- Glowing log effect fuel bed
- Flat to wall installation
- Self-assembly required

H1000 x W1120 x D350mm
White, oak effect 5023539026049

£430

3 year guarantee RC TC LED FOCALPOINT

Search for 'focal point linford' on **diy.com**

Oakmead Optiflame suite

Electric

- Heat output low 1kW/high 2kW
- Bottom front facing convected heat
- Optiflame LED flame effect
- Glowing log fuel bed
- Independent controllable flame
- Thermostatic control with 2 heat settings

H1000 x W1040 x D340mm
Ivory white, oak, grey 5011139062154

£510

1 year guarantee MC RC TC LED Dimplex

Search for 'dimplex oakmead' on **diy.com**

Optimyst suite

Electric

- Heat output low 1kW/ high 2kW
- Top upward facing convected heat
- Optimyst 3D flame smoke effect
- Glowing Log effect fuel bed
- Independent controllable flame
- Thermostatic control with 2 heat settings

H864 x W920 x D316mm
Warm white 5011139045409

£880

2 year guarantee MC TC RC Dimplex

Search for 'dimplex optimyst' on **diy.com**

For individual manufacturer's guarantee terms and conditions see page 90.
For B&Q guarantee terms and conditions visit diy.com. Your legal rights are not affected.

Attley

Electric

- Heat output low 0.9kW/high 1.8kW
- Front facing convected heat
- Surround complete with electric stove and flue pipe
- Glowing log bed, under mantel lights
- Flat to wall installation

H1058 x W1070 x D350mm
Stone, anthracite, oak effect
5030478715989 **£640**

Anthracite, oak veneer 5030478716016

£650

1 year guarantee MC TC LED bemodern®

Search for 'be modern attley' on **diy.com**

Burnham Optimyst Suite

Electric

- Heat output low 1kW/ high 2kW
- Top upward facing convected heat
- Optimyst 3D flame smoke effect
- Glowing Log effect fuel bed
- Independent controllable flame
- Thermostatic control with 2 heat settings

H870 x W920 x D310mm
Dove white & black 5011139101167

£880

2 year guarantee RC MC TC Dimplex®

Search for 'dimplex optimyst' on **diy.com**

Selected products are available for home delivery only to selected locations, restrictions may apply. Delivery charges may apply.
For full details see diy.com/customer-support/delivery. **Prices correct as of 9 September 2022.**

Fontwell micro marble

Electric

- Heat output low 0.9kW/high 1.8kW
- Front facing convected heat
- Glowing log bed
- Latest LED flame effect
- Adjustable brightness setting
- Under mantel lights included
- Flat to wall installation
- Self-assembly required

H1125 x W1270 x D400mm
White marble & slate effect
5030478717143

£940

1 year guarantee MC TC LED bemodern®

Search for 'be modern fontwell' on **diy.com**

Fontwell micro marble

Electric

- Heat output low 0.9kW/high 1.8kW
- Front facing convected heat
- Glowing log bed
- Latest LED flame effect
- Adjustable brightness setting
- Under mantel lights included
- Flat to wall installation
- Self-assembly required

H1125 x W1270 x D400mm
White marble & Herringbone effect
5030478717563

£940

1 year guarantee MC TC LED bemodern®

Search for 'be modern fontwell' on **diy.com**

For individual manufacturer's guarantee terms and conditions see page 90.
For B&Q guarantee terms and conditions visit diy.com. Your legal rights are not affected.

Emmbrook

Electric

- Heat output low 0.9kW/high 1.8kW
- Front facing convected heat
- Glowing log bed
- Latest LED flame effect
- Adjustable brightness setting
- Under mantel lights included
- Flat to wall installation

H1115 x W1220 x D350mm
Grey & slate effect 5030478717235

£730

LED bemodern®

Search for 'be modern emmbrook' on **diy.com**

Eastcote

Electric

- Heat output low 0.9kW/high 1.8kW
- Front facing convected heat
- Glowing log bed
- Latest LED flame effect
- Adjustable brightness setting
- Under mantel lights included
- Flat to wall installation

H1115 x W1220 x D350mm
Grey & slate effect 5030478717532

£730

LED bemodern®

Search for 'be modern eastcote' on **diy.com**

Selected products are available for home delivery only to selected locations, restrictions may apply. Delivery charges may apply.
For full details see diy.com/customer-support/delivery. **Prices correct as of 9 September 2022.**

Deansgate

Electric

- Heat output low 1kW/high 2kW
- Front facing convected heat
- Glowing coal bed
- Latest LED flame effect
- Flame effect only setting
- Under mantel lights
- Flat to wall installation
- Fully assembled one box product

H1050 x W1220 x D300mm
Grey & black 5030478716993

£810

1 year guarantee MC TC LED bemodern®

Search for 'be modern deansgate' on **diy.com**

Colville MKII

Electric

- Heat output low 1kW/high 2Kw
- Front facing convected heat
- Glowing coal bed
- Latest LED flame effect
- Flame effect only setting
- Flat to wall installation
- Fully assembled one box product

H1078 x W1170 x D300mm
Soft white 5030478715347

£640

1 year guarantee MC TC LED bemodern®

Search for 'be modern colville' on **diy.com**

For individual manufacturer's guarantee terms and conditions see page 90.
For B&Q guarantee terms and conditions visit diy.com. Your legal rights are not affected.

New

Elberton

Electric

- Heat output low 1kW/high 2kW
- Front facing convected heat
- Realistic glowing coal bed
- Latest LED flame technology
- Flame only setting
- Under mantel lights included
- Tile effect inserts
- Fully assembled one box product
- Flat to wall fix – no chimney or flue required

H1115 x W1320 x D330mm
Ash white 5030478720440

£920

1 year guarantee MC TC LED bemodern®

Search for 'be modern elberton' on **diy.com**

Rockford

Electric

- Heat output low 0.95Kw/high 1.8kW
- Front facing convected heat
- Painted suite, cast iron effect stove
- Glowing log effect fuel bed
- Self-assembly required

H1000 x W1120 x D350mm
Grey oak effect 5023539026032

£310

3 year guarantee MC TC LED FOCALPOINT

Search for 'focal point rockford' on **diy.com**

Hurst

Electric

- Heat output low 0.95Kw/high 1.8kW
- Front facing convected heat
- Painted suite, cast iron effect stove
- Glowing log effect fuel bed
- Self-assembly required

H1000 x W1120 x D350mm
Grey oak effect 5023539026056

£390

3 year guarantee MC TC LED FOCALPOINT

Search for 'focal point hurst' on **diy.com**

Selected products are available for home delivery only to selected locations, restrictions may apply. Delivery charges may apply.
For full details see diy.com/customer-support/delivery. **Prices correct as of 9 September 2022.**

Atherstone Brick

Electric

- Heat output low 0.75kW/high 1.5kW
- Front facing convected heat
- Glowing log effect fuel bed
- Latest LED flame effect, independently of heat
- 3 flame intensity levels
- Flat to wall installation
- No assembly required

H800 x W1000 x D240mm
Brick surround set 5023539026346

£348

3 year guarantee RC TC LED FOCALPOINT

Search for 'focal point atherstone' on **diy.com**

Atherstone Slate

Electric

- Heat output low 0.75kW/high 1.5kW
- Front facing convected heat
- Glowing log effect fuel bed
- Latest LED flame effect, independently of heat
- 3 flame intensity levels
- Flat to wall installation
- No assembly required

H800 x W1000 x D240mm
Slate surround set 5023539026353

£348

3 year guarantee RC TC LED FOCALPOINT

Search for 'focal point atherstone' on **diy.com**

For individual manufacturer's guarantee terms and conditions see page 90.
For B&Q guarantee terms and conditions visit diy.com. Your legal rights are not affected.

Edmonton

Electric

- Heat output low 1kW/high 2kW
- Front facing convected heat
- Widescreen LED electric fire with Chrome trim and fret
- Realistic glowing log bed
- Fully assembled one box product
- Flat to wall fix

H942 x W1050 x D280mm
Soft white 5030478691931

£620

1 year guarantee MC TC LED bemodern®

Search for 'be modern edmonton' on **diy.com**

Ashburnham

Electric

- Heat output low1kW/high 2kW
- Widescreen LED fire with brushed chrome trim
- Realistic glowing log bed
- Fully assembled one box product
- Flat to wall fix

H840 x W1170 x D300mm
Matt cashmere 5030478691894

£640

1 year guarantee MC TC LED bemodern®

Search for 'be modern ashburnham' on **diy.com**

Selected products are available for home delivery only to selected locations, restrictions may apply. Delivery charges may apply.
For full details see diy.com/customer-support/delivery. **Prices correct as of 9 September 2022.**

Alder

Electric

- Heat output low 1kW/high 2kW
- Front facing convected heat
- Ultra-modern glass fronted wide screen LED fire
- Glowing log bed
- Flat to wall installation
- Fully assembled one box product

H985 x W1120 x D330mm
Ash white, chrome trim 5030478715286 **£640**
Ash white, black nickel trim 5030478715316 **£640**
Grey & oak effect 5030478716955 (Shown)

£680

1 year guarantee MC TC LED bemodern®

Search for 'be modern alder' on **diy.com**

New

Kingswell

Electric

- Heat output up to 2kW
- Front facing convected heat
- Realistic glowing log bed
- Latest LED flame technology
- Flat to wall fix – no chimney or flue required
- Fully assembled one box product

H1022 x W1170 x D300mm
Dark Grey 5030478720464

£880

1 year guarantee TC RC LED bemodern®

Search for 'be modern kingswell' on **diy.com**

Calida

Electric

- Heat output up to 2kW
- Front facing convected heat
- Ultra-modern glass fronted LED fire
- Glowing log bed
- 7 day programmable thermostatic remote control.
- Flat to wall installation
- Fully assembled one box product

H1071 x W1220 x D300mm
Ash white 5030478715378

£740

1 year guarantee TC RC LED bemodern®

Search for 'be modern calida' on **diy.com**

For individual manufacturer's guarantee terms and conditions see page 90.
For B&Q guarantee terms and conditions visit diy.com. Your legal rights are not affected.

Mayford

Electric

- Heat output adjustable low 0kW/high 2kW
- Front facing convected heat
- Coal effect coal bed
- Eco LED flame
- Flame independent from heat
- 7 day timer
- Flat to wall installation
- No assembly required

H891 x W1156 x D300mm
White 5060534980426

£560

1 year guarantee TC RC LED SUNCREST

Search for 'katell mayford' on **diy.com**

Chelford

Electric

- Heat output low 1kW/high 2kW
- Front facing convected heat
- Glowing log bed
- Latest LED flame effect
- Flame effect only setting
- Flat to wall installation
- Fully assembled one box product

H1083 x W1220 x D300mm
Ash white 5030478716931

£710

1 year guarantee MC TC LED bemodern®

Search for 'be modern chelford' on **diy.com**

Selected products are available for home delivery only to selected locations, restrictions may apply. Delivery charges may apply.
For full details see diy.com/customer-support/delivery. **Prices correct as of 9 September 2022.**

Easton

Electric

- Heat output low 1 Kw/high 1.5kW
- Front facing convected heat
- Painted suite, glass front
- Glowing log effect fuel bed
- Flat to wall installation
- Self-assembly required

H872 x W1140 x D330mm
White, marble effect 5023539026087

£440

3 year guarantee RC TC LED FOCALPOINT

Search for 'focal point easton' on **diy.com**

For individual manufacturer's guarantee terms and conditions see page 90.
For B&Q guarantee terms and conditions visit diy.com. Your legal rights are not affected.

Calbourne

Electric

- Heat output low 1 Kw/high 1.5kW
- Front facing convected heat
- Painted suite, glass front
- Glowing log effect fuel bed
- Flat to wall installation
- Self-assembly required

H872 x W1140 x D330mm
White 5023539026070

£420

3 year guarantee RC TC LED FOCALPOINT

Search for 'focal point calbourne' on **diy.com**

Medford

Electric

- Heat output low 1kW/high 1.8kW
- Front facing convected heat
- Painted suite, glass front
- 7 colour mantel lights • Log effect
- Flat to wall installation
- No assembly required

H690 x W1080 x D235mm
White 5023539026018

£420

3 year guarantee RC TC LED FOCALPOINT

Search for 'focal point medford' on **diy.com**

Selected products are available for home delivery only to selected locations, restrictions may apply. Delivery charges may apply.
For full details see diy.com/customer-support/delivery. **Prices correct as of 9 September 2022.**

Horsham

Electric

- Heat output low 1kW/high 1.5kW
- Front facing convected heat
- Painted suite, glass front
- Glowing log effect
- Flat to wall installation
- Self-assembly required

H872 x W1140 x D330mm
Grey, oak effect 5023539026063

£470

3 year guarantee RC TC LED FOCALPOINT

Search for 'focal point horsham' on **diy.com**

Amersham

Electric

- Heat output low 1kW/high 1.5kW
- Front facing heater
- Glowing log effect fuel bed
- Self-assembly required
- Flat to wall installation

H886 x W1140 x D330mm
White 5023539021921

£470

3 year guarantee RC TC LED FOCALPOINT

Search for 'focal point amersham' on **diy.com**

For individual manufacturer's guarantee terms and conditions see page 90.
For B&Q guarantee terms and conditions visit diy.com. Your legal rights are not affected.

Elvington

Electric

- Heat output low 0.95kW/high 1.5kW
- Front facing convected heat
- Glowing log effect fuel bed
- Latest LED flame effect
- 5 flame intensity levels, independent of heat
- Flat to wall installation
- Self-assembly required

H943 x W1000 x D225mm
White 5023539026360

£430

3 year guarantee RC TC LED FOCALPOINT

Search for 'focal point elvington' on **diy.com**

Blakemere MK2

Electric

- Heat output low 1kW/high 2kW
- Front facing convected heat
- Glowing log effect bed
- Latest LED flame effect
- Flame effect only setting
- Flat to wall installation
- Fully assembled one box product

H985 x W1120 x D330mm
Natural oak & stone effect 5030478716979

£670

1 year guarantee MC TC LED bemodern®

Search for 'be modern blakemere' on **diy.com**

Selected products are available for home delivery only to selected locations, restrictions may apply. Delivery charges may apply.
For full details see diy.com/customer-support/delivery. **Prices correct as of 9 September 2022.**

Beauport

Electric

- Heat output low 1kW / high 2kW
- Featuring an LED electric fire with chrome trim and fret
- Featuring under mantel lights to enhance the look
- Glowing coal effect bed
- Side control switches for easy operation
- Fully assembled one box product
- Flat to wall fix

H1096 x W1220 x D300mm
Matt cashmere 5030478691863

£610

LED

bemodern®

Search for 'be modern beauport' on **diy.com**

Ellison

Electric

- Heat output low 1kW / high 2kW
- Electric fireplace suite with soft curved arch
- Featuring an LED electric fire with chrome trim
- Featuring under mantel lights to enhance the look
- Glowing coal effect bed
- Side controls for easy operation
- Fully assembled one box product
- Flat to wall fix

H1038 x W1220 x D300mm
Soft white 5030478691887

£610

LED

Search for 'be modern ellison' on **diy.com**

bemodern®

Ellenslea

micro marble

Electric

- Heat output up to 2kW
- Front facing convected heat
- 5 LED Flame intensities
- Flame effect only setting
- 7 colour fuel bed options
- 7 day programmable thermostatic remote control
- Flat to wall installation
- Self-assembly required

H940 x W1170 x D240mm
White micro marble
5030478717556

£910

LED

Search for 'be modern ellenslea' on **diy.com**

bemodern®

For individual manufacturer's guarantee terms and conditions see page 90.
For B&Q guarantee terms and conditions visit diy.com. Your legal rights are not affected.

Alena
micro marble

Electric

- Heat output low 1kW/high 2kW
- Front facing convected heat
- Wide screen LED fire, chrome trim
- Realistic glowing log bed
- Flat to wall installation
- Self assembly required

H940 x W1170 x D240mm
White micro marble, grey slip 5030478715934

£740

LED bemodern®

Search for 'be modern alena' on **diy.com**

Mariano
micro marble

Electric

- Heat output low 1kW / high 2kW
- Contemporary electric suite in manila micro marble
- Brushed chrome trimmed fire with LED flame effect
- Realistic glowing coal bed
- Flat to wall installation
- Self assembly required

H1045 x W1170 x D300mm
Manila micro marble 5030478691993

£620

LED bemodern®

Search for 'be modern mariano' **on diy.com**

Evelina
micro marble

Electric

- Heat output low 1kW/high 2kW
- Front facing convected heat
- Realistic glowing log bed
- Wide screen LED fire, chrome trim
- Flat to wall installation
- Self assembly required

H940 x W1170 x D240mm
White micro marble 5030478715910
Manila micro marble 5030478691986

£680

LED bemodern®

Search for 'be modern evelina' **on diy.com**

Selected products are available for home delivery only to selected locations, restrictions may apply. Delivery charges may apply.
For full details see diy.com/customer-support/delivery. **Prices correct as of 9 September 2022.**

New

Farlington

Electric

- Heat output variable up to 2kW
- Front facing convected heat
- Realistic glowing log bed
- Latest LED flame technology
- Flat to wall fix
- Fully assembled one box product

H653 x W1370 x D400mm
Ash white & Chalet oak effect 5030478720471

£940

1 year guarantee TC RC LED bemodern®

Search for 'be modern farlington' on **diy.com**

Amwell

Electric

- Heat output up to 2kW
- Front facing convected heat
- Glowing log bed
- Latest LED flame effect
- 3 flame colour effects and 5 brightness settings
- 7 day programmable thermostatic remote control
- Flat to wall installation
- Fully assembled one box product

H704 x W1270 x D195mm
Ash white & oak effect 5030478717280

£740

1 year guarantee TC RC LED bemodern®

Search for 'be modern amwell' on **diy.com**

Camaro grande

Electric

- Heat output up to 2kW
- 7 day programmable thermostatic remote
- Flame only effect
- Glowing log bed
- No chimney or recess required
- 5 Flame brightness levels
- Flat to wall installation
- Fully assembled one box product

H760 x W1320 x D300mm
Pearlescent cashmere/ anthracite
5030478711677

£820

1 year guarantee TC RC LED bemodern®

Search for 'be modern camaro' on **diy.com**

For individual manufacturer's guarantee terms and conditions see page 90.
For B&Q guarantee terms and conditions visit diy.com. Your legal rights are not affected.

Panoramic

Electric

- Heat output low 1kW/high 1.5kW
- Front facing convected heat
- Glowing pebble effect fuel bed
- Latest LED flame effect
- 5 flame intensity levels, independent of heat
- Flat to wall installation
- Self-assembly required

H748 x W1080 x D235mm
White 5023539022546

£370

3 year guarantee · RC · TC · LED · FOCALPOINT

Search for 'focal point panoramic' on **diy.com**

Ashgrove floor standing

Electric

- Heat output low 1kW/high 2kW
- Front facing convected heat
- Log, stone and crystal effect fuel bed
- Latest LED flame effect
- 6 colour fuel bed options
- Some assembly required
- 3 Flame intensities
- 7 day programmable timer
- Glass 3 sided panoramic fire
- Flat to wall installation

H734 x W1162 x D300mm
Ash white 5030478717501

£920

1 year guarantee · TC · RC · LED · bemodern®

Search for 'be modern ashgrove' on **diy.com**

Selected products are available for home delivery only to selected locations, restrictions may apply. Delivery charges may apply.
For full details see diy.com/customer-support/delivery. **Prices correct as of 9 September 2022.**

Eggleston

Electric

- Heat output adjustable low 0kW/high 2kW
- Front facing convected heat
- Eco flame
- Glowing log bed
- 3 log flame effect settings
- 7 day timer
- Flat to wall installation
- No assembly required

H802 x W1200 x D295mm
White 5060534980471

£620

1 year guarantee TC RC LED SUNCREST

Search for 'katell eggleston' on **diy.com**

Hanwell

Electric

- Heat output up to 2kW
- Front facing convected heat
- Glowing log bed
- Latest LED flame effect
- 3 colour fuel bed option, 5 flame intensity levels
- Flat to wall installation
- Fully assembled one box product

H1150 x W1600 x D260mm
Ash white 5030478717303

£920

1 year guarantee TC RC LED bemodern®

Search for 'be modern hanwell' on **diy.com**

For individual manufacturer's guarantee terms and conditions see page 90.
For B&Q guarantee terms and conditions visit diy.com. Your legal rights are not affected.

Tall chimney breast fireplace suites

Get the look of a fully finished chimney breast installation, accentuated by the warm glow of LED.

Hanthorpe

tall chimney breast fireplace suite

Electric

- Heat output up to 2kW
- Front facing convected heat
- Glowing log bed
- Latest LED flame effect
- 3 colour fuel bed option, 5 flame intensity levels
- Voice activated top plinth mood lights or remote control
- Works with google assistant & just ask Alexa
- 7 day programmable thermostatic remote control
- TV not supplied
- Adjustable top plinth
- Flat to wall installation
- Self-assembly required

H2200-2500 x W1600 x D260mm
Ash white 5030478717549

£1280

1 year guarantee TC RC LED bemodern®

Search for 'be modern hanthorpe' on **diy.com**

Selected products are available for home delivery only to selected locations, restrictions may apply. Delivery charges may apply. For full details see diy.com/customer-support/delivery. **Prices correct as of 9 September 2022.**

Charingworth

tall chimney breast fireplace suite

Electric

- Heat output low 0.9kW/high 1.8kW
- Front facing convected heat
- Glowing log bed
- Latest LED flame effect
- Adjustable brightness setting
- LED downlights with grey back panel
- Voice activated top plinth mood lights or remote control
- Works with google assistant & just ask Alexa
- 7 day programmable thermostatic remote control
- TV not supplied
- Adjustable top plinth
- Flat to wall installation
- Self-assembly required

H2200-2500 x W1370x D360mm
(available as surround only excludes stove)
White & oak effect 5030478717518 **£940**

White & oak effect 5030478717525
(Shown as a suite includes stove)

£1180

1 year guarantee MC TC LED bemodern®

Search for 'be modern charingworth' on **diy.com**

For individual manufacturer's guarantee terms and conditions see page 90.
For B&Q guarantee terms and conditions visit diy.com. Your legal rights are not affected.

Wall hung fires

Wall hung fires are quick and easy to install, with everything you need in one box. Electric wall hung fires simply hang and plug in, with flame effects that you can enjoy without the heat all year round (see page 35). Gas wall hung fires should be installed by a qualified professional (see page 42).

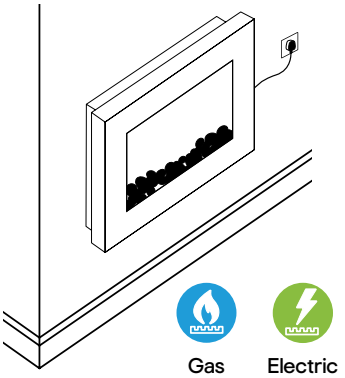

Ashgrove

Electric

- Heat output up to 2kW
- Front facing convected heat
- Log, stone and crystal effect fuel bed
- Latest LED flame effect
- 6 colour fuel bed options
- 3 flame intensity levels

H584 x W1162 x D300mm
Ash white 5030478717082

£860

1 year guarantee TC RC LED bemodern®

Search for 'be modern ashgrove' on **diy.com**

New

Insito 1000L 1, 2 or 3 sided

Electric

- Heat output variable up to high 2kW
- 1, 2 or 3 sided inset electric fire for media wall insulation
- Glass fronted
- 6 fuel bed colours
- Orange downlights
- 3 flame brightness settings
- Loose logs, pebbles & crystals
- Customers to construct own wall / media wall to house fire
- 7 day programmable remote control
- One box product

H488 x W1035 x D236mm
2 sided shown 5030478720488

£820

1 year guarantee TC RC LED bemodern®

Search for 'be modern insito 1000L' on **diy.com**

For individual manufacturer's guarantee terms and conditions see page 90.
For B&Q guarantee terms and conditions visit diy.com. Your legal rights are not affected.

Camaro petite

Electric

- Heat output up to 2kW
- 7 day programmable thermostatic remote
- Flame only effect
- No chimney or recess required
- 3 colour fuel bed options
- 5 Flame intensity levels

H602 x W1100 x D255mm

Matt Cashmere with Anthracite trim

5030478711615

£680

1 year guarantee RC TC LED bemodern®

Search for 'be modern camaro' on **diy.com**

Camaro media unit

H270 x W1034 x D300
Matt cashmere 5030478715903

£190

1 year guarantee bemodern®

Camaro massimo

Electric

- Heat output up to 2kW
- 7 day programmable thermostatic remote
- Flame only effect
- No chimney or recess required
- 3 colour fuel bed options
- 5 Flame intensity levels

H602 x W1390 x D255mm

Matt cashmere with anthracite trim
5030478711646

£740

1 year guarantee RC TC LED bemodern®

Search for 'be modern camaro' on **diy.com**

Optimyst Wall Fire

Electric

- Heat output low 1kW/ high 2kW
- Top upward facing convected heat
- Optimyst 3D flame smoke effect
- Glowing Log effect fuel bed
- Independent controllable flame
- Thermostatic control with 2 heat settings

H692 x W900 x D172mm
Black 5011139061348

£690

2 year guarantee MC RC TC Dimplex

Search for 'dimplex optimyst' on **diy.com**

Selected products are available for home delivery only to selected locations, restrictions may apply. Delivery charges may apply.
For full details see diy.com/customer-support/delivery. **Prices correct as of 9 September 2022.**

Phoenix wall fire

Electric

- Heat output low 1kW/high 2kW
- Upwards facing convected heat
- Crystal effect fuel bed
- Latest LED flame effect
- Smart functionality - control from anywhere using your phone

H1000 x W500 x D132mm
Black 5054061290707

£245

2 year guarantee RC LED UP

Search for 'beldray phoenix' on **diy.com**

Beldray Corsica mirror wall

Electric

- Heat output low 0.9kW/high 1.8kW
- Upwards facing convected heat
- Glowing log effect fuel bed
- Latest LED flame effect
- 7 day timer

H540 x W800 x D110mm
Black 5054061290844

£225

2 year guarantee RC LED UP

Search for 'beldray corsica' on **diy.com**

Osmington

Electric

- Heat output low 0.9Kw/high 1.8kW
- Front facing convected heat
- Glowing log effect fuel bed
- Latest LED flame effect

H524 x W808 x D141mm
White 5023539022539

£225

3 year guarantee RC LED FOCALPOINT

Search for 'focalpoint osmington' on **diy.com**

For individual manufacturer's guarantee terms and conditions see page 90.
For B&Q guarantee terms and conditions visit diy.com. Your legal rights are not affected.

Abington

Electric

- Heat output up to 2kW
- Front facing convected heat
- Slimline wall mounted with flat glass fascia
- 7 Ambient back light colours
- 7 Fuel effects
- Interchangeable fuel bed log/pebbles or crystals

H605 x W900 x D110mm
Grey 5030478717358 (Shown)
Black 5030478701647

£290

1 year guarantee RC TC LED bemodern®

Search for 'be modern abington' on **diy.com**

Lexington

Electric

- Heat output low 0.9kW / high 1.8kW
- Heat emits from the bottom
- Glowing log effect fuel bed
- 7 colour side lights
- Adjustable flame brightness
- On screen LED information display
- The built in thermostat allows you to control the temperature of your room

H520 x W600 x D144mm
Black 5023539022805

£190

3 year guarantee RC TC LED FOCALPOINT

search for 'focal point lexington' on **diy.com**

Toluca Deluxe Optiflame

Electric

- Heat output low 1kW/ high 2kW
- Bottom front facing convected heat
- Optiflame LED flame effect
- Glowing fuel bed – choice of crystals or pebbles
- Bluetooth speaker
- Choice of colour themes

H540 x W820 x D155mm
Black 5011139061935

£360

1 year guarantee TC RC MC LED Dimplex®

Search for 'dimplex toluca' on **diy.com**

Selected products are available for home delivery only to selected locations, restrictions may apply. Delivery charges may apply.
For full details see diy.com/customer-support/delivery. **Prices correct as of 9 September 2022.**

Pasadena

Electric

H440 x W914 x D127mm

Black	5023539022553
Grey	5023539024250 (Shown)

£245

3 year guarantee · RC · TC · LED · FOCALPOINT

Search for 'focal point pasadena' on **diy.com**

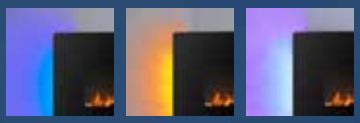

3 different colour ambient backlights

- Heat output low 0.75kW/ high 1.5kW
- Bottom vented heat
- Freestanding or wall mounted
- Glowing log effect, crystal effect or real pebble fuel bed options
- 4 different, realistic flame options
- 3 different coloured ambient back lights
- Timer control options from 1hr to 8hrs
- Curved glass front

Stand

For individual manufacturer's guarantee terms and conditions see page 90.
For B&Q guarantee terms and conditions visit diy.com. Your legal rights are not affected.

Rivenhall

Electric

- Heat output low 1kW/high 2Kw
- Front facing convected heat
- Glowing log effect fuel bed
- Latest LED flame effect
- 3 flame intensity levels

H600 x W1000 x D265mm
Black 5023539026445
White 5023539026438

£440

3 year guarantee RC TC LED FOCALPOINT

Search for 'focal point rivenhall' on **diy.com**

White

Black (Shown)

Selected products are available for home delivery only to selected locations, restrictions may apply. Delivery charges may apply. For full details see diy.com/customer-support/delivery. **Prices correct as of 9 September 2022.**

Kovia

Electric

- Heat output low 1kW/high 2kW
- Patented 3D flame effect
- Flame independent from heat
- Upward facing convected heat
- Adaptive start control
- Self-assembly required

H500 x W1000 x D135 mm
Black 5059340241678

£168

2 year guarantee · MC · RC · LED

Search for 'Kovia' on **diy.com**

Lingga

Electric

- Heat output low 0.95kW/high 1.9kW
- LED flame effect, 3 settings glowing log bed
- Weekly timer
- Thermal safety cut off
- Self-assembly required

H560 x W655 x D135mm
Black 3663602672753

£134

2 year guarantee · RC · LED

Search for 'lingga' on **diy.com**

Ebony

Electric (Shown)

- Heat output low 1Kw/high 1.5Kw
- Heat emitted from base of fire
- Curved black glass front
- Glowing log effect fuel bed
- 5 ambient flame levels

H645 x W548 x D217mm
Black Glass 5023539022089

£160

3 year guarantee · RC · TC · LED · FOCALPOINT

Gas

- Energy input and heat output fully variable between low 1kW and high 2kW
- Curved black glass front

H620 x W520 x D161mm
Black Glass 5023539024359

£390

3 year guarantee · Minimum room size 23m³ · NO FLUE · MC · safe · A* · FOCALPOINT

Search for 'focal point ebony' on **diy.com**

*Energy label range A++ to G

For individual manufacturer's guarantee terms and conditions see page 90.
For B&Q guarantee terms and conditions visit diy.com. Your legal rights are not affected.

FOCALPOINT

- Replace your standard gas fire with a flueless gas fire
- Up to 70% cheaper heating bills compared to equivalent electric fire
- A flueless gas fire will convert 100% of the gas to heat, unlike open coal effect fires which convert as little as 10%+
- Wall mounted gas fire – no recess required

*Calculation is based on gas consumption running on maximum setting for the Midnight flueless gas fire (2.0kW) compared to a 2kW electric fire. All figures quoted are gross.

+Donnachadh McCarthy, leading eco-consultant, Sunday Times

Vesuvius

Gas

- Energy input and heat output fully variable between low 1.5kW and high 2.6kW
- Natural stone front
- Top venting heat output
- Instant, variable & comfortable heat
- Catalytic technology & O2 depletion sensor

H385 x W1100 x D180mm
Limestone 5023539011458
Black Granite 5023539015531

3 year guarantee · Minimum room size 30m³ · NO FLUE · MC · safe · A*

£820

Search for 'focal point vesuvius' on **diy.com**

Electric

- Heat output low 1Kw/high 1.5Kw
- Top venting heat output
- Log, pebble or crystal fuel effect
- 3 colour side and fuel bed options
- H385 x W1100 x D180mm

Limestone 5023539022645
Black Granite 5023539022638 (Shown)

3 year guarantee · RC · TC · LED

£760

Black Granite (Shown) · Limestone

Shown: Vesuvius black granite electric

Selected products are available for home delivery only to selected locations, restrictions may apply. Delivery charges may apply. For full details see diy.com/customer-support/delivery. **Prices correct as of 9 September 2022.**

Midnight

Gas

- Energy input and heat output fully variable between low 1.3kW and high 2kW
- Black glass front
- Top venting heat output
- Instant, variable & comfortable heat
- Catalytic technology & O2 depletion sensor

H385 x W870 x D168mm

Black Glass 5023539024366

£380 FOCALPOINT

3 year guarantee* | Minimum room size 23m³ | NO FLUE | MC | safe | A*

Search for 'focal point midnight' on **diy.com**

Pinoir

Gas

- Energy input and heat output fully variable between low 2kW and high 3.5kW
- Black granite frame
- Top venting heat output
- Instant, variable & comfortable heat
- Catalytic technology & O2 depletion sensor

H600 x W1048 x D158mm

Black 5023539011502

£820 FOCALPOINT

3 year guarantee* | Minimum room size 40m³ | NO FLUE | MC | safe | A*

Search for 'focal point pinoir' on **diy.com**

Piano

Gas

- Energy input and heat output fully variable between low 1.5kW and high 2.6kW
- Four piece black glass frame
- Top venting heat output
- Instant, variable & comfortable heat
- Catalytic technology & O2 depletion sensor

H505 x W819 x D169mm

Black 5023539024342

£420 FOCALPOINT

3 year guarantee* | Minimum room size 30m³ | NO FLUE | MC | safe | A*

Search for 'focal point piano' on **diy.com**

*Energy label range A++ to G

For individual manufacturer's guarantee terms and conditions see page 90.
For B&Q guarantee terms and conditions visit diy.com. Your legal rights are not affected.

Hagen

Hole in the wall fire

Electric

- Heat output low 1kW/high 2kW
- Front facing convected heat
- Inset fire with slim profile finish
- Realistic glowing log bed

H613 x W564 x D164mm
Black nickel 5030478715781

£320

1 year guarantee MC TC LED bemodern

Search for 'be modern hagen' on **diy.com**

Medford

Hole in the wall fire

Electric

- Heat output low 0.95kW/high 1.8kW
- Can be installed in to your wall to create a flush wall finish
- LED flame effect
- Can be used independently from heat

H442 x W610 x D205mm
Black 5023539022843 (Shown)
Chrome 5025359026025 **£242**

£260

3 year guarantee RC TC LED FOCALPOINT

Search for 'focal point medford' on **diy.com**

Sonar

Hole in the wall fire

Electric

- Adjustable heat output low 0kW/high 2kW
- Front facing convected heat
- Eco flame
- 3 Flame settings

H600 x W713 x D148mm
Brushed steel 5060534980761

£315

1 year guarantee TC RC LED SUNCREST

Search for 'katell sonar' on **diy.com**

Selected products are available for home delivery only to selected locations, restrictions may apply. Delivery charges may apply.
For full details see diy.com/customer-support/delivery. **Prices correct as of 9 September 2022.**

Stoves

Stoves are available in gas, electric or solid fuel types. Electric stoves are portable, simply plug in and enjoy (see page 47). Flueless gas stoves should be installed by a qualified professional (see page 55). Solid fuel stoves are more efficient than open fires (see page 58).

Remember to fit a carbon monoxide (CO) detector in the same room as your new solid fuel stove.

Orba cylindrical stove

Electric

- Heat output low 1kW/high 2kW
- Front facing convected heat
- Ideal for corners & conservatories
- Glowing log bed
- Large chrome handle

H650 x W410 x D410mm
Matt black 5030478715811

£340

1 year guarantee MC TC LED bemodern®

Search for 'be modern orba' on **diy.com**

Orba cylindrical stove with log store (shown)

Electric

- Heat output low 1kW/high 2Kw
- Front facing convected heat
- Glowing log bed
- Latest LED flame effect
- Logs not included

H850 x W410 x D410mm
Matt black 5030478717570

£390

1 year guarantee MC TC LED bemodern®

Search for 'be modern orba' on **diy.com**

For individual manufacturer's guarantee terms and conditions see page 90.
For B&Q guarantee terms and conditions visit diy.com. Your legal rights are not affected.

Electric stoves

These electric stoves are portable, making them perfect for any room in your home. Simply plug in and enjoy the cosy flame effect with or without the heat.

ES2000

Electric

Just plug in and feel the glow! It really is that easy - the ES2000 has all the charm of a traditional stove without the cost of installation or ongoing fuel. It also features an energy saving thermostat for temperature control.

- Heat output low 0.95kW / high 1.8kW
- Front facing conected heat
- Optional flame effect
- Glowing log effect fuel bed

Cream	5023539014008
Black	5023539005303
Grey	5023539014022
Burgundy	5023539014060

H540 x W430 x D285mm

£130

FOCALPOINT

Search for 'focal point es2000' **on diy.com**

Cream

Grey

Black

Burgundy

Electric stove pipe

- Black cast effect
- Emulates a real wood burning stove

H280 x W130 x D230mm
5023539015425 **£26**

ES 3000

Electric

- Heat output low 0.95kW/high 1.8kW
- Front facing convected heat
- Cast iron effect
- Glowing log effect fuel bed

H560 x W510 x D310mm
Black 5023539022782

£210

LED FOCALPOINT

Search for 'focal point es3000' **on diy.com**

Selected products are available for home delivery only to selected locations, restrictions may apply. Delivery charges may apply.
For full details see diy.com/customer-support/delivery. **Prices correct as of 9 September 2022.**

Jazz Optiflame Stove

Electric

- Heat output low 1kW/ high 2kW
- Bottom front facing convected heat
- Optiflame LED flame effect
- Glowing log effect fuel bed
- Independent controllable flame
- Thermostatic control with 2 heat settings

H597 x W510 x D340mm

Black 5011139061515
White 5011139061508

£230

1 year guarantee MC TC RC LED Dimplex

Search for 'dimplex jazz' **on diy.com**

For individual manufacturer's guarantee terms and conditions see page 90.
For B&Q guarantee terms and conditions visit diy.com. Your legal rights are not affected.

Cardivik

Electric

- Heat output low 0.95kW / high 1.8kW
- Burning log sound effect
- Five flame colour & speed settings
- Five brightness intensity settings
- Discreet concealed controls with remote

H558 x W448 x D240mm

Black	5023539020009
Grey	5023539020023
Cream	5023539020016

£160

3 year guarantee TC RC LED FOCALPOINT

Search for 'focal point cardivik' **on diy.com**

Selected products are available for home delivery only to selected locations, restrictions may apply. Delivery charges may apply.
For full details see diy.com/customer-support/delivery. **Prices correct as of 9 September 2022.**

Cassia Optiflame stove

Electric

- Heat output low 1kW/ high 2kW
- Bottom front facing convected heat
- Optiflame LED flame effect
- Glowing Log effect fuel bed
- Independent controllable flame
- Thermostatic control with 2 heat settings

H640 x W620 x D390mm
Matt black 5011139069672

£480

1 year guarantee MC RC TC LED Dimplex

Search for 'dimplex cassia' on **diy.com**

Bailey

Electric

- Heat output up to 2kW
- Electric stove with ultra-realistic flame effect and glowing coal bed
- 7-day programmable remote control
- Timber construction with metal handle hinges and feet
- Flame only setting

H586 x W486 x D292mm
Black 5030478701456

£590

1 year guarantee RC TC LED bemodern®

Search for 'be modern bailey' on **diy.com**

For individual manufacturer's guarantee terms and conditions see page 90.
For B&Q guarantee terms and conditions visit diy.com. Your legal rights are not affected.

Torva

Electric

- Heat output low 0.9kW/high 1.8kW
- Front facing convected heat
- Glowing log bed
- Lightweight, easy to install
- Some assembly required

H528 x W445 x D272mm
Cream 5030478715842
French grey 5030478715118
Black 5030478701586

£180

1 year guaranteed MC TC LED bemodern®

Search for 'be modern torva' **on diy.com**

Decorative flue pipe

- Perfect match for Torva

H195 x W122 x D195mm
Cream 5030478715866
French grey 5030478715880
Black 5030478715514
Also see page 87

£24 bemodern®

Search for 'be modern flue pipe' **on diy.com**

Grand Optimyst

Electric

- Heat output low 1kW/ high 2kW
- Bottom front facing convected heat
- Optimyst 3D flame smoke effect
- Glowing Log effect fuel bed
- Independent controllable flame
- Thermostatic control with 2 heat settings

H660 x W620 x D390mm

Noir 5011139054074	**£720**
Creme 5011139054081	**£720**
Matt graphite 5011139064585	**£720**

Rouge 5011139053633 (Shown)

£720

2 year guaranteed RC TC MC Dimplex

Search for 'dimplex optimyst' on **diy.com**

Noir

Matt graphite

Creme

Selected products are available for home delivery only to selected locations, restrictions may apply. Delivery charges may apply.
For full details see diy.com/customer-support/delivery. **Prices correct as of 9 September 2022.**

Hemsworth

Electric

- Heat output up to 2kW
- Front facing convected heat
- Glowing log effect fuel bed
- Latest LED flame effect
- 5 flame intensity settings
- Remote control option

H618 x W570 x D205mm
Black 5030478701616

£240

1 year guarantee RC TC LED bemodern®

Search for 'be modern hemsworth' on **diy.com**

Gothenburg

Electric

- Heat output low 1kW/high 2kW
- Front facing convected heat
- Glowing log effect fuel bed
- Latest LED flame effect

H558 x W436 x D237mm
Black 5023539022799

£230

3 year guarantee MC RC LED FOCALPOINT

Search for 'focal point gothenburg' on **diy.com**

For individual manufacturer's guarantee terms and conditions see page 90.
For B&Q guarantee terms and conditions visit diy.com. Your legal rights are not affected.

New **Colours available from December 2022**

Akershus

Electric

- Heat output low 0.95kW/high 1.85kW
- Bottom facing convected heat
- Glowing log bed
- Cast effect finish
- Adjustable thermostat
- Adjustable flame brightness

H548 x W415 x D280mm
Green 5063022028396
Black 3663602911128
Cream 5063022028419
Grey 5063022028426

Blue 5063022028402

£85

2 year guarantee MC TC LED

Search for 'akershus' on **diy.com**

Optimyst stove

Electric

- Heat output low 1kW/ high 2kW
- Bottom front facing convected heat
- Optimyst 3D flame smoke effect
- Glowing Log effect fuel bed
- Thermostatic control with 2 heat settings

H620 x W480 x D300mm
Black 5011139045348

£580

2 year guarantee RC MC TC Dimplex

Search for 'dimplex optimyst' on **diy.com**

Glass side panels enable 3 sided view

Malmo

Electric

- Heat output low 0.95kW/high 1.8kW
- Front facing convected heat
- Cast iron effect
- With glass sides
- Glowing log effect fuel bed

H548 x W390 x D260mm
Black 5023539026001

£110

1 year guarantee MC LED FOCALPOINT

Search for 'focal point malmo' on **diy.com**

Selected products are available for home delivery only to selected locations, restrictions may apply. Delivery charges may apply.
For full details see diy.com/customer-support/delivery. **Prices correct as of 9 September 2022.**

Wimslow

Electric

- Heat output up to 2kW
- Front facing convected heat
- Latest LED flame effect
- 5 Flame intensity levels
- 7 colour fuel bed options

H585 x W550 x D297mm
Black 5030478717068
Grey 5030478717037

£380

bemodern®

Search for 'be modern wimslow" on **diy.com**

For individual manufacturer's guarantee terms and conditions see page 90.
For B&Q guarantee terms and conditions visit diy.com. Your legal rights are not affected.

Weybourne

Electric

- Heat output low 0.95 kW/high 1.8 kW
- Front facing convected heat
- Glowing log effect fuel bed
- Latest LED flame effect
- Dimmer control high to low

H670 x W635 x D360mm
Black 5023539026452
Sage grey 5023539026469

£260

3 year guarantee MC LED FOCALPOINT

Search for 'focal point weybourne' on **diy.com**

Selected products are available for home delivery only to selected locations, restrictions may apply. Delivery charges may apply.
For full details see diy.com/customer-support/delivery. **Prices correct as of 9 September 2022.**

FOCALPOINT

- Up to 70% cheaper heating bills compared to equivalent electric fire
- A flueless gas fire will convert 100% of the gas to heat, unlike open coal effect fires which convert as little as 10%**
- No chimney, flue or hearth required
- Can be installed on a laminate floor
- Gas fires should be installed by a Gas Safe registered engineer
- Instant, variable, comfortable heat
- Energy rated Class A
- Catalytic technology & incorporated safety features
- Easy to use front facing slide control system
- Detailed log effect fuel bed
- Available in three styles and three colours

*Calculation is based on gas consumption running on maximum setting for the Midnight flueless gas fire (2.0kW) compared to a 2kW electric fire. All figures quoted are gross. **Donnachadh McCarthy, leading eco-consultant, Sunday Times

Svelvik

FOCALPOINT

Gas stoves

Gas

- Heat output Gas low 1.5kW/high 3.1kW
- Front facing converted heat
- No assembly required

H637 x W645 x D320mm

£890

Search for 'focal point svelvik' on **diy.com**

White
Gas 5023539021068

Black
Gas 5023539021051

Burgundy
Gas 5023539024328

*Energy label range A++ to G

For individual manufacturer's guarantee terms and conditions see page 90.
For B&Q guarantee terms and conditions visit diy.com. Your legal rights are not affected.

Dalvik

FOCALPOINT

Gas

- Heat output Gas low 1.5kW/high 3.1kW
- Top venting converted heat
- No assembly required

H632 x W634 x D385mm

£890

Search for 'focal point dalvik' on **diy.com**

White (shown)
Gas 5023539021006

Burgundy
Gas 5023539024304

Black
Gas 5023539020993

Leirvik

FOCALPOINT

Gas

- Heat output Gas low 1.5kW/high 3.1kW
- Top venting converted heat
- No assembly required

H632 x W634 x D385mm

£920

Search for 'focal point leirvik' on **diy.com**

Black (shown)
Gas 5023539021013

Burgundy
Gas 5023539024281

White
Gas 5023539021020

Selected products are available for home delivery only to selected locations, restrictions may apply. Delivery charges may apply.
For full details see diy.com/customer-support/delivery. **Prices correct as of 9 September 2022.**

Solid fuel stoves

Solid fuel stoves are ultra clean burning with low emissions, full multifuel capability is standard, providing 80% plus efficiency. With an extra powerful air wash system and patented tertiary air system they are DEFRA Exempt for burning wood in smokeless zones.

Suncrest

Solid fuel

- Heat output low 3.8kW/high 5kW
- Front facing convected heat
- Excludes flue pipe

H520 x W458 x D282mm
Wide Fully EcoDesign Black
5060534980785 **£780**

H595 x W458 x D282mm
High Line Wide EcoDesign Black
5060534980808 **£830**

From
£780

Search for 'katell suncrest' on **diy.com**

Shown: 506053498075

*Energy label range A++ to G

For individual manufacturer's guarantee terms and conditions see page 90.
For B&Q guarantee terms and conditions visit diy.com. Your legal rights are not affected.

Suncrest

Solid fuel

- Heat output low 3.8kW/high 5kW
- Front facing convected heat
- Excludes flue pipe

H520 x W358 x D282mm
Fully EcoDesign Black
5060534980778 **£720**

H560 x W358 x D282mm
High Line EcoDesign Black
5060534980792 **£790**

From
£720

Search for 'katell suncrest' on **diy.com**

Shown: 5060534980778

Products are available for Home Delivery only to selected locations. Restrictions apply.
For delivery charges see diy.com. For guarantee terms and conditions see page 90.
This does not affect your legal rights. **Prices correct as of 15 October 2021.**

Inset fires

Electric inset fires are easy to install as they don't require a chimney or flue. You can operate the flame independently giving a warm ambience without the heat. Whatever your flue type we have a solution to meet your gas inset fire requirements. Complete the look with surrounds, back panels and hearths (from page 66).

Ekon

Electric

- Heat output low 1kW/high 2kW
- Front facing convected heat
- Modern flat glass fronted electric fire
- Glowing log bed

H608 x W509 x D160mm

£320

1 year guarantee MC TC LED bemodern®

Search for 'be modern ekon' on **diy.com**

Black nickel effect

Chrome

For individual manufacturer's guarantee terms and conditions see page 90.
For B&Q guarantee terms and conditions visit diy.com. Your legal rights are not affected.

Selected products are available for home delivery only to selected locations, restrictions may apply. Delivery charges may apply. For full details see diy.com/customer-support/delivery. **Prices correct as of 9 September 2022.**

Edana

Electric

- Heat output up to 2kW
- Modern curved glass fronted electric fire
- Front facing convected heat
- Glowing coal bed • Solid metal fret
- 7 day programmable remote
- 75mm rebate fits most surrounds

H612 x W510 x D172mm

£380

1 year guarantee TC RC LED bemodern®

Search for 'be modern edana' on **diy.com**

Chrome

Black nickel

Helmsdale Optiflame

Electric

- Heat output low 1kW/ high 2kW
- Top upward facing convected heat
- Optiflame LED flame effect
- Glowing fuel bed – choice of coal, logs & crystals
- Thermostatic control with 2 heat settings

H613 x W517 x D180mm

£360

1 year guarantee RC MC TC LED Dimplex®

Search for 'dimplex helmsdale' on **diy.com**

Chrome effect

Brass effect

Kempton

Electric

- Heat output up to 2kW
- Front facing convected heat
- 3D log effect behind smoked glass for ultra realism
- Latest LED flame effect
- 7 colour fuel bed option
- 5 Flame intensity levels

Both sizes available in chrome or black nickel
16" H593 x W509 x D110mm
22" H603 x W661 x D110mm

From
£440

1 year guarantee TC RC LED bemodern®

Search for 'be modern kempton' on **diy.com**

Chrome 22"

Black nickel 16"

Chrome effect

Gorstan Optiflame

Electric

- Heat output low 1kW/ high 2kW
- Top upward facing convected heat
- Optiflame LED flame effect
- Glowing fuel bed – Choice of coal, logs, crystals & pebbles
- Thermostatic control with 2 heat settings
- Varable flame brightness with choice of blue flame

H613 x W517 x D195mm

£340

1 year guarantee TC RC MC LED Dimplex

Search for 'dimplex gorstan' on **diy.com**

Chrome

Fremont

Electric

- Heat output low 1kw/high 2kw
- Front facing convected heat
- Contemporary style glowing log bed
- LED flame technology, long life and low energy consumption

H610 x W514 x D164mm

£370

1 year guarantee TC MC LED bemodern®

Search for 'be modern fremont' on **diy.com**

Chrome effect

Zamora Optiflame freestanding fire

Electric

- Heat output low 1kW/ high 2kW
- Top upward facing convected heat
- Optiflame LED flame effect
- Glowing fuel bed – choice of coal or pebbles
- Thermostatic control with 2 heat settings

H665 x W603 x D226mm

£192

1 year guarantee TC MC LED Dimplex

Search for 'dimplex zamora' on **diy.com**

Optimyst inset fire

Electric

- Heat output low 1kW/ high 2kW
- Top upward facing convected heat
- Optimyst 3D flame smoke effect
- Glowing Log effect fuel bed
- Independent controllable flame
- Thermostatic control with 2 heat settings

H620 x W520 x D231mm
Brass effect 5011139045324
Chrome effect 5011139045331

£590

2 year guarantee TC RC MC Dimplex

Search for 'dimplex optimyst' on **diy.com**

Brass effect

Chrome effect

For individual manufacturer's guarantee terms and conditions see page 90.
For B&Q guarantee terms and conditions visit diy.com. Your legal rights are not affected.

Selected products are available for home delivery only to selected locations, restrictions may apply. Delivery charges may apply. For full details see diy.com/customer-support/delivery. **Prices correct as of 9 September 2022.**

Lycia

Electric

- Heat output low 1kW/ high 2kW
- Front facing convected heat
- Black cast effect frame and front with chrome details
- Inset or freestanding - spacer frames included
- Electric option includes a spacer

H635 x W530 x D166mm

£178

3 year guarantee TC RC LED FOCALPOINT

Search for 'focal point lycia' on **diy.com**

Black / Brass effect

Black / Chrome

Arch

full depth gas fire

- Heat output low 1.9kW / high 3.8kW
- Coal effect fuel bed

H596 x W485 x D180mm

£370

Search for 'focal point arch' on **diy.com**

Gas

Full depth
H596 x W485 x D180mm

- With multiple control options Finger slide & remote available

3 year guarantee PRE CAST 1 2 safe F*

FOCALPOINT

Satin chrome effect

Black

Blenheim

- Electric fires includes spacer frame for flat to wall or recessed installation
- Gas fires available with fingerslide or remote options
- See diy.com 'focal point blenheim' for heat outputs

Gas

Multi flue
H590 x W480 x D108mm

PRE CAST 1 2 safe F*

Full depth
H590 x W480 x D180mm

PRE CAST 1 2 safe F*

High efficiency
H590 x W485 x D125mm
Finger slide & remote

PRE CAST 1 2 safe C*

Electric

H592 x W482 x D114mm
Reflection in black

RC LED

From
£168

3 year guarantee FOCALPOINT

Search for 'focal point blenheim' on **diy.com**

Chrome effect

Black

Brass effect

*Energy label range A++ to G

To shop inset fires visit diy.com

Finsbury Other models below available see diy.com for full details and pricing

- Electric fires include spacer frame for flat to wall or recessed installation
- Gas fires available with Fingerslide or remote options
- See diy.com 'focal point finsbury' for heat outputs

Gas

Multi flue
H596 x W485 x D108mm

Full depth
H596 x W485 x D180mm
Also available as finger slide & remote

From
£310

Electric

H596 x W485 x D114mm
Reflection version also available

MC LED

FOCALPOINT

Search for
'focal point finsbury'
on **diy.com**

Black

Satin chrome effect

Langham Other models below available see diy.com for full details and pricing

- Electric fires include spacer frame for flat to wall or recessed installation
- Gas fires available with Fingerslide or remote options
- See diy.com 'focal point langham' for heat outputs

Gas

Multi flue
H605 x W510 x D108mm
Finger slide & remote available

Full depth
H605 x W510 x D180mm

From
£236

Electric

H605 x W510 x D114mm

RC LED

FOCALPOINT

Search for
'focal point langham'
on **diy.com**

Gas - Chrome effect

Electric - Chrome effect
Electric - Chrome effect reflections

Combining a surround with laminate enables it to be used with gas or electric fires, dependent upon your existing flue

For individual manufacturer's guarantee terms and conditions see page 90.
For B&Q guarantee terms and conditions visit diy.com. Your legal rights are not affected.

Selected products are available for home delivery only to selected locations, restrictions may apply. Delivery charges may apply. For full details see diy.com/customer-support/delivery. **Prices correct as of 9 September 2022.**

Lulworth

- Electric fires include spacer frame for flat to wall or recessed installation
- Gas fires available with Fingerslide or remote options
- See diy.com 'focal point lulworth' for heat outputs

Gas

Multi flue
H590 x W480 x D108mm

Full depth
H590 x W480 x D180mm

High efficiency
H590 x W480 x D125mm

From
£210

Electric

H592 x W482 x D114mm

LED

FOCALPOINT

Search for
'focal point lulworth'
on **diy.com**

Gas - Stainless Steel

Electric - Stainless Steel reflections

Soho

- Electric fires include spacer frame for flat to wall or recessed installation
- Gas fires available with Fingerslide or remote options
- See diy.com 'focal point soho' for heat outputs

Gas

Multi flue
H596 x W485 x D108mm

Full depth
H596 x W485 x D180mm

From
£310

Electric

H596 x W485 x D114mm

LED

FOCALPOINT

Search for
'focal point soho'
on **diy.com**

Black

Chrome effect

*Energy label range A++ to G

Surround sets and surrounds

Choose from painted, wood or micro marble, with a complete surround set. Or create your own look by choosing a surround, then adding a matching or contrasting back panel and hearth. (see page 74).
See pages 76 for details on how to combine the surrounds with your fire.

Surround sets for stoves

(Can be used for inset fires with a spacer, excludes the fire)

Charing

Surround set excludes stove

- Suitable for electric stoves only
- Under mantel lighting
- Complete with back panel and hearth
- Pre-cut wiring hole in back panel
- Supplied fully assembled
- Flat to wall fix

H1150 x W1370 x D360mm
Ash white & chalet oak effect 5030478717013

£620

Search for 'bemodern charing' on **diy.com**

bemodern®

Stove not included, for illustration purposes only

For individual manufacturer's guarantee terms and conditions see page 90.
For B&Q guarantee terms and conditions visit diy.com. Your legal rights are not affected.

Surround sets for stoves

(excludes the fire)

Emmbrook

- Suitable for electric stoves only
- Under mantel lighting
- Complete with back panel and hearth
- Flat to wall fix
- Supplied fully assembled

H1115 x W1220 x D350mm
Grey & slate effect 5030478717211

£580

Search for 'be modern emmbrook' on **diy.com**

Eastcote

- Suitable for electric stoves only
- Under mantel lighting
- Complete with back panel and hearth
- Flat to wall fix
- Supplied fully assembled

H1115 x W1220 x D350mm
Grey & slate effect 5030478717105

£580

Search for 'be modern eastcote' on **diy.com**

Attley stone effect

- Suitable for electric stoves only
- Under mantel lighting
- Complete with back panel and hearth
- Flat to wall fix
- Supplied fully assembled

H1058 x W1070 x D350mm
Stone anthracite & oak effect 5030478715545

£470

Search for 'be modern attley' on **diy.com**

Attley oak veneer

- Suitable for electric stoves only
- Under mantel lighting
- Complete with back panel and hearth
- Flat to wall fix
- Supplied fully assembled

H1058 x W1070 x D350mm
Black & oak veneer 5030478715576

£460

Search for 'be modern attley' on **diy.com**

Nightwood

- Suitable for electric stoves only
- Inglenook surround with Chicago concrete effect back panel
- Complete with under mantel lights
- Flat to wall fix
- Supplied fully assembled

H1075 x W1220 x D360mm
Ash white & chicago concrete 5030478715439

£560

Search for 'be modern nightwood' on **diy.com**

Templeton

- Inglenook surround
- Suitable for electric stoves
- Complete with back panel and hearth
- Complete with under mantel lights
- Flat to wall fix
- Supplied fully assembled

H1126 x W1220 x D350mm
Soft white, stone 5030478715620

£520

Search for 'be modern templeton' on **diy.com**

Selected products are available for home delivery only to selected locations, restrictions may apply. Delivery charges may apply.
For full details see diy.com/customer-support/delivery. **Prices correct as of 9 September 2022.**

Surround sets for stoves

Lashenden slate

- Suitable for electric fires and stoves only
- Real slate back panel
- LED downlight
- Assembly required

H1091 x W1250 x D430mm
Real slate back panel 5023539027244

£298

Search for 'focal point lashenden' on **diy.com**

Lashenden black

- Suitable for electric fires and stoves only
- LED downlight
- Assembly required

H1091 x W1250 x D380mm
Black 5023539026407

£264

Search for 'focal point lashenden' on **diy.com**

Innsworth

- Suitable for electric fires and stoves only
- Assembly required
- Complete with back panel and hearth

H1091 x W1250 x D380mm
Cream 5023539026391

£272

Search for 'focal point innsworth' on **diy.com**

New

Fontwell metro tile

- Micro marble inglenook surround, with back panel and hearth
- Metro tile effect back panel
- LED under mantel lighting
- Flat to wall fix
- Some assembly required

H1125 x W1270 x D400mm

White marble with cashmere back panel
5030478720495

£860

Search for 'be modern fontwell' on **diy.com**

New

Fontwell sage green

- Micro marble inglenook surround, with back panel and hearth
- LED under mantel lighting
- Flat to wall fix
- Some assembly required

H1125 x W1270 x D400mm

White marble with sage green slatted back panel
5030478720501

£860

Search for 'be modern fontwell' on **diy.com**

Fontwell white & grey

- Micro marble
- Suitable for electric stoves only
- With under mantel lighting
- Some assembly required
- Flat to wall fix
- Complete with herringbone back panel and hearth

H1125 x W1270 x D400mm
White marble & Grey herringbone
5030478717341

£810

Search for 'be modern fontwell' on **diy.com**

For individual manufacturer's guarantee terms and conditions see page 90.
For B&Q guarantee terms and conditions visit diy.com. Your legal rights are not affected.

Micro marble surround sets for inset fires

Northolt

- Suitable for electric fires and stoves only
- Assembly required
- Complete with back panel and hearth

H1091 x W1250 x D380mm
White 5023539026421

£186

Search for 'focal point northolt' on **diy.com**

Adriana

- Manila marble surround with with matching back panel and hearth with tudor arch
- Complete surround with back panel
- Standard lipped hearth
- Some assembly required

H1070 x W1170 x D400mm

Manila Micro Marble with lights
5030478683011

£620

Search for 'be modern adriana' on **diy.com**

Perlita

- Manila micro marble surround with matching back panel and hearth
- Some assembly required

H1055 x W1220 x D400mm

Also available

White marble surround with lights
5030478716047 **£690**

Manila micro marble with lights (Shown)
5030478683028 **£690**

£690

Search for 'be modern perlita' on **diy.com**

Fontwell slate effect

- Micro marble
- Suitable for electric stoves only
- With under mantel lighting
- Some assembly required
- Flat to wall fix
- Complete with Slate effect back panel and hearth

H1125 x W1270 x D400mm
White marble & slate effect 5030478717129

£820

Search for 'be modern fontwell' on **diy.com**

Midland

- Some assembly required
- Micro marble surround with matching back panel and hearth

H1045 x W1168 x D400mm

Also available

White micro marble with lights (Shown)
5030478716061 **£620**

Manila micro marble with lights
5030478682977

£620

Search for 'be modern midland' on **diy.com**

Combining a surround with laminate enables it to be used with gas or electric fires, dependent upon your existing flue

Selected products are available for home delivery only to selected locations, restrictions may apply. Delivery charges may apply.
For full details see diy.com/customer-support/delivery. **Prices correct as of 9 September 2022.**

Micro marble surround sets for inset fires

Annabelle

- Manila micro marble surround, featuring gentle waved arch
- Complete with surround, back panel and hearth
- Some assembly required

H1070 x W1170 x D400mm

Manila Micro Marble with lights
5030478682991

£620

Search for 'be modern annabelle' on **diy.com**

Lauretta

- White marble with grey slips
- Rebate 115mm
- Complete with surround, back panel and hearth
- Some assembly required

H1075 x W1170 x D400mm

White marble 5030478715200

£570

Search for 'be modern lauretta' on **diy.com**

Tahlia

- Manila micro marble surround with lights
- Complete with surround, back panel and hearth
- Some assembly required

H1070 x W1170 x D400mm
5030478683004

£620

Search for 'be modern tahlia' on **diy.com**

Oslo

- Traditional manila micro marble surround
- Sculpted tudor arch design set into a stepped Square profile
- Complete with back panel and standard lipped hearth
- Ideal for gas or electric fires
- Some assembly required

H1125 x W1295 x D400mm

Manila micro marble surround set
5030478682953

£720

Search for 'be modern oslo' on **diy.com**

Whitburn

Timber surround complete with
White micro marble back panel and hearth

- Some assembly required
- Includes under mantle lights

H1131 x W1220 x D400mm

Whitburn surround stone set
5030478691092

£690

Search for 'be modern whitburn' on **diy.com**

Whitburn

Timber surround complete with
White micro marble back panel and hearth

- Some assembly required
- Includes under mantle lights

H1131 x W1220 x D400mm

Whitburn surround matt cashmere set
5030478691108

£690

Search for 'be modern whitburn' on **diy.com**

For individual manufacturer's guarantee terms and conditions see page 90.
For B&Q guarantee terms and conditions visit diy.com. Your legal rights are not affected.

Surrounds for electric fires & stoves

(Gas only suitable with laminate back panel)

FOCALPOINT

Montana

- Self-assembly required

H1041 x W1212 x D197mm
White
5023539016965

£218

Search for'focal point montana' **on diy.com**

Charlottesville

- Self-assembly required

H1172 x W1340 x D185mm
White
5023539013810

£218

Search for 'focal point charlottesville' on diy.com

Regent

- White satin finish surround
- Self-assembly required

H1022 x W1100 x D185mm
White
5023539013971

£218

Search for 'focal point regent' **on diy.com**

Woodthorpe

- Self-assembly required

H1126 x W1375 x D180mm
White
5023539013957

£198

Search for 'focal point woodthorpe' on **diy.com**

Nebraska

- Classic arch
- Self-assembly required

H1120 x W1300 x D185mm
White
5023539014251

£162

Search for 'focal point nebraska' **on diy.com**

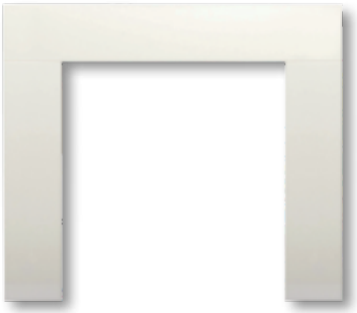

Wichita

- Self-assembly required

H1030 x W1170 x D150mm
White
5023539013872

£162

Search for 'focal point wichita' **on diy.com**

Combining a surround with laminate enables it to be used with gas or electric fires, dependent upon your existing flue

Selected products are available for home delivery only to selected locations, restrictions may apply. Delivery charges may apply.
For full details see diy.com/customer-support/delivery. **Prices correct as of 9 September 2022.**

Surrounds for electric fires & stoves

(Gas only suitable with laminate back panel)

Firbeck

- Self-assembly required

H1041 x W1212 x D197mm
Oak veneer 5023539026377

£158

Search for 'focal point firbeck' on **diy.com**

Firbeck

- Self-assembly required

H1041 x W1212 x D197mm
Grey effect 5023539026384

£158

Search for 'focal point firbeck' on **diy.com**

Montana

- Self-assembly required

H1041 x W1212 x D197mm
Grey 5023539024120

£262

Search for'focal point montana' **on diy.com**

Montana

- Self-assembly required

H1041 x W1212 x D197mm
Grey and oak effect
5023539026100

£218

Search for'focal point montana' **on diy.com**

Maine

- Veneered finish
- Self-assembly required

H1041 x W1212 x D197mm
Grey, oak effect
5023539026094

£192

Search for 'focal point maine' **on diy.com**

Charlottesville

- Self-assembly required

H1172 x W1340 x D185mm
Oak veneer
5023539013797

£278

Search for 'focal point charlottesville' **on diy.com**

Mini mercia

- Oak effect surround
- Self-assembly required

H1172 x W1220 x D210mm
Oak veneer
5023539013452

£218

Search for 'focal point mini mercia' **on diy.com**

Michigan

- Veneered finish
- Self-assembly required

H1041 x W1212 x D197mm
Driftwood veneer
5023539026117

£192

Search for 'focal point michigan' on **diy.com**

For individual manufacturer's guarantee terms and conditions see page 90.
For B&Q guarantee terms and conditions visit diy.com. Your legal rights are not affected.

Nebraska

- Self-assembly required
- Classic arch

H1120 x W1300 x D185mm

Walnut veneer
5023539013834

£182

Search for 'focal point nebraska' **on diy.com**

Wichita

- Self-assembly required

H1030 x W1170 x D150mm
Walnut effect
5023539013896

£158

Search for 'focal point wichita' on **diy.com**

Charlottesville

- Self-assembly required

H1172 x W1340 x D185mm
Unfinished pine veneer
5023539013773

£218

Search for 'focal point charlottesville' on **diy.com**

Durham

- Self-assembly required
- Wooden surround with corbel detail

H1143 x W1340 x D203mm
Waxed Solid Pine
5023539013438

£218

Search for 'focal point durham' on **diy.com**

Woodthorpe

- Self-assembly required

H1126 x W1375 x D180mm
Unfinished Pine Veneer
5023539013919

£168

Search for 'focal point woodthorpe' on **diy.com**

Nebraska

- Self-assembly required
- Classic arch

H1120 x W1300 x D185mm

Oak veneer effect
5023539013858

£168

Search for 'focal point nebraska' **on diy.com**

Nebraska

- Self-assembly required

H1120 x W1300 x D185mm
Pine veneer
5023539026537

£178

Search for 'focal point nebraska' on **diy.com**

Combining a surround with laminate enables it to be used with gas or electric fires, dependent upon your existing flue

Selected products are available for home delivery only to selected locations, restrictions may apply. Delivery charges may apply. For full details see diy.com/customer-support/delivery. **Prices correct as of 9 September 2022.**

Back panels & hearths

Back panels and hearths come in a choice of micro marble and granite or reversible laminate finishes. Available in a range of beautiful colours and effects, there's something which will complement your fire and surround perfectly. There's also stylish fireside accessories to complete your new look.
For more information search for 'back panels and hearths' on **diy.com**

The back panel and hearth sets below are provided in 5 parts, you can assemble the back panel with the middle panel to create a solid back panel with a small plug cut out for an electric stove or without the middle panel to inset a traditional electric fire.

With middle panel

Without middle panel

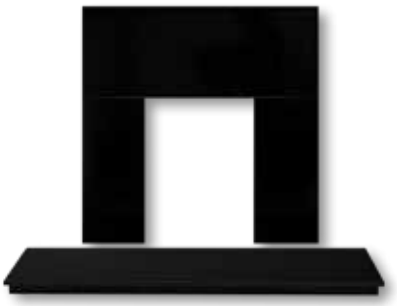

MDF Back panel & hearth set

H980 x W1250 x D380mm
Black
5023539026490

£198

MDF Back panel & hearth set

H980 x W1250 x D380mm
White
5023539026506

£198

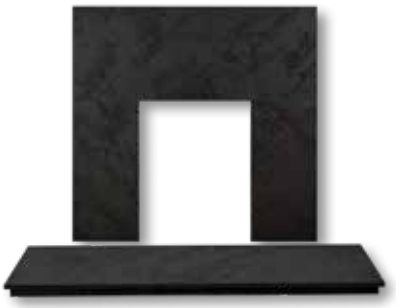

MDF Back panel & hearth set

H980 x W1250 x D380mm
Slate effect
5023539026513

£198

MDF Back panel & hearth set

H980 x W1250 x D380mm
White marble effect
5023539026520

£198

For individual manufacturer's guarantee terms and conditions see page 90.
For B&Q guarantee terms and conditions visit diy.com. Your legal rights are not affected.

Reversible laminate back panel & hearths

Please note that these need to be cut to fit your stove or inset fire.
These hearths require a hearth tray.

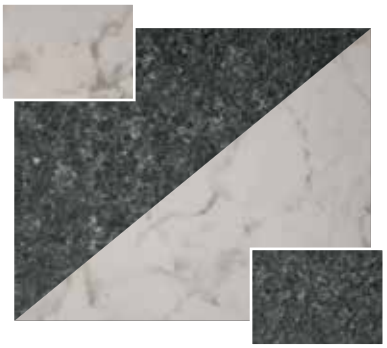

Slate/alabaster effect

Back panel H930 x W930 x D30mm
5023539024199 **£52**

Hearth H1334 x W362 x D30mm
5023539024205 **£38**

Sandstone/limestone effect

Back panel H930 x W930 x D30mm
5023539026124 **£52**

Hearth H1334 x W362 x D30mm
5023539026131 **£38**

Granite/stone effect

Back panel H930 x W930 x D30mm
5023539026148 **£52**

Hearth H1334 x W362 x D30mm
5023539026155 **£38**

Hearth trays

Real oak veneer

H50 x W1370 x D380mm 5023539024175 **£54**
H50 x W1250 x D380mm 5023539024182 **£52**

Unfinished pine veneer

H50 x W1370 x D380mm 5023539024151 **£52**
H50 x W1250 x D380mm 5023539024168 **£48**

White

H50 x W1370 x D380mm 5023539024137 **£52**
H50 x W1250 x D380mm 5023539024144 **£48**

Grey

H50 x W1250 x D380mm 5023539026483 **£48**

Black MDF hearth for use with electric stoves

H50 x W800 x D380mm
Black 5023539022874 **£52**

Combining a surround with laminate enables it to be used with gas or electric fires, dependent upon your existing flue

Selected products are available for home delivery only to selected locations, restrictions may apply. Delivery charges may apply.
For full details see diy.com/customer-support/delivery. **Prices correct as of 9 September 2022.**

Mix and match
Fire and surround sets

Whether you choose gas or electric there is a mix and match option for you. In this section we've matched inset or stove fires with a selection of surround sets.

Kempton 16" electric fire & Whitburn stove surround set shown

Gas Electric

1. Choose your fire, either stove or inset

2. Select your surround set.

Design your dream fireplace

See your dream fireplace come to life in 3D with our online design tool.
Search for 'fireplace builder' on **diy.com**

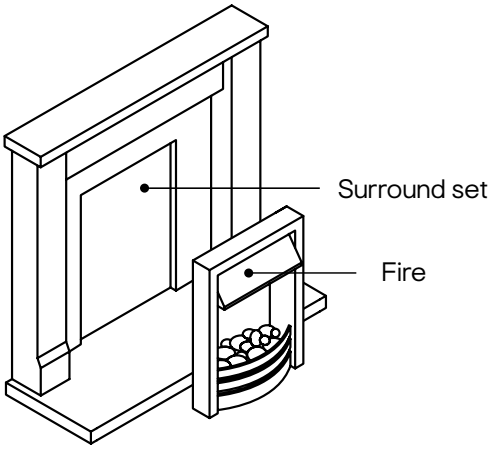

For individual manufacturer's guarantee terms and conditions see page 90.
For B&Q guarantee terms and conditions visit diy.com. Your legal rights are not affected.

Arch with Adriana surround set

Other models below available see **diy.com** for full details and pricing

Model shown

Fire

Arch chrome effect full depth gas fire Chrome effect

See page 63

H596 x W485 x D180mm
5023539005037

£370

Search for 'focal point arch' on **diy.com**

Surround set

Adriana

H1070 x W1170 x D400mm
- Some assembly required
- Manila marble surround with tudor arch
- Complete surround with back panel
- Suitable for gas & electric fires
- Standard lipped hearth

Manila Micro Marble with lights
5030478683011

£620

Search for 'be modern adriana' on **diy.com**

Selected products are available for home delivery only to selected locations, restrictions may apply. Delivery charges may apply.
For full details see diy.com/customer-support/delivery. **Prices correct as of 9 September 2022.**

Edana with Lauretta surround set

Other models below available see **diy.com** for full details and pricing

Model shown

Fire

Edana

See page 61

H612 x W510 x D175mm
Also available in chrome finish

Black nickel effect
5030478715699

£380

Search for 'be modern edana' on **diy.com**

Surround set

Lauretta

White marble 5030478715200
H1075 x W1170 x D400mm
- Some assembly required
- White marble with grey slips
- Rebate 115mm

£570

Search for 'be modern lauretta' on **diy.com**

For individual manufacturer's guarantee terms and conditions see page 90.
For B&Q guarantee terms and conditions visit diy.com. Your legal rights are not affected.

Torva with Charing surround set

Other models below available see **diy.com** for full details and pricing

Model shown

Fire

Torva electric stove

See page 51

H528 x W445 x D272mm
Also available in cream & french grey

Black
5030478701586

£180

Search for 'be modern torva' on **diy.com**

Decorative flue pipe

See page 87

Also available in cream & french grey

H195 x W122 x D195mm
Black 5030478715514

£24

Surround set

Charing

H1150 x W1370 x D360mm
Complete with back panel and hearth
- Includes under mantle lights
- Suitable for electric stoves only
- Supplied fully assembled

Charing white and oak effect surround set
5030478717013

£620

Search for 'be modern charing' on **diy.com**

Selected products are available for home delivery only to selected locations, restrictions may apply. Delivery charges may apply.
For full details see diy.com/customer-support/delivery. **Prices correct as of 9 September 2022.**

Wimslow with Emmbrook surround set

Other models below available see **diy.com** for full details and pricing

Model shown

Fire

Wimslow electric stove

See page 54

H585 x W550 x D297mm
Also available in black

Grey
5030478717037

£380

Search for 'be modern Wimslow' on **diy.com**

Surround set

Emmbrook

H1115 x W1220 x D350mm
Complete with back panel and hearth
- Includes under mantle lights
- Suitable for electric stoves only
- Supplied fully assembled

Emmbrook grey and slate effect surround set
5030478717211

£580

Search for 'be modern emmbrook' on **diy.com**

For individual manufacturer's guarantee terms and conditions see page 90.
For B&Q guarantee terms and conditions visit diy.com. Your legal rights are not affected.

Bailey with Fontwell surround set

Other models below available see **diy.com** for full details and pricing

Model shown

Fire

Bailey electric stove

See page 50

H586 x W486 x D292mm
Black
5030478701456

£590

Search for 'be modern bailey' on **diy.com**

Decorative flue pipe

See page 87

Also available in cream & french grey

H195 x W122 x D195mm
Black 5030478715514

£24

Surround set

New

Fontwell metro tile

- Micro marble inglenook surround, with back panel and hearth
- LED under mantel lighting
- Flat to wall fix
- Some assembly required

H1125 x W1270 x D400mm

White marble with cashmere back panel
5030478720495

£860

Search for 'be modern fontwell' on **diy.com**

Wimslow with Fontwell surround set

Other models below available see **diy.com** for full details and pricing

Model shown

Fire

Wimslow electric stove

See page 54

H585 x W550 x D297mm
Also available in grey

Black
5030478717068

£380 **stove only**

Search for 'be modern Wimslow' on **diy.com**

Decorative flue pipe

See page 87

Also available in cream & french grey

H195 x W122 x D195mm
Black 5030478715514

£24

Surround set

New

Fontwell sage green

- Micro marble inglenook surround, with back panel and hearth
- LED under mantel lighting
- Flat to wall fix
- Some assembly required

H1125 x W1270 x D400mm

White marble with sage green back panel
5030478720501

£860

Search for 'be modern fontwell' on **diy.com**

For individual manufacturer's guarantee terms and conditions see page 90.
For B&Q guarantee terms and conditions visit diy.com. Your legal rights are not affected.

Mix and match
Create your own fireplace

Whether you choose gas or electric there is a mix and match option for you. In this section we've matched our inset or stove fires with a selection of surrounds, back panels and hearths (and hearth trays if required) See page 65-74.

Gas Electric

1. Choose your fire, either stove or inset

2. Select your surround

3. Match up with a back panel

4. Finish off with a co-ordinating hearth
(and tray if required)

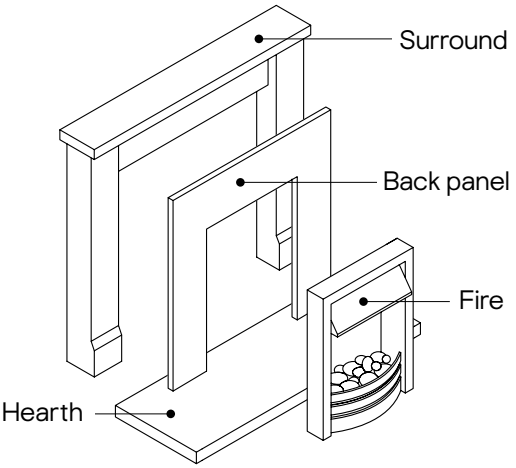

Design your dream fireplace

See your dream fireplace come to life in 3D with our online design tool.
Search for 'fireplace builder' on **diy.com**

Selected products are available for home delivery only to selected locations, restrictions may apply. Delivery charges may apply. For full details see diy.com/customer-support/delivery. **Prices correct as of 9 September 2022.**

Blenheim with Mini Mercia surround

Other models below available see **diy.com** for full details and pricing

Back panels and hearths also available – see pages 74, 75

Model shown

Fire

Blenheim electric fire

See page 63

H590 x W485 x D180mm
Brass effect
5023539022027

£168

Search for 'focal point blenheim' on **diy.com**

Surround

Mini mercia

- Suitable for electric and gas fires
- Assembly required

H1172 x W1220 x D210mm
Oak veneer 5023539013452

£218

Search for 'focal point mini mercia' **on diy.com**

MDF back panel & hearth set

H980x W1250 x D380mm
Black
5023539026490

£198

Search for 'back panels and hearths' on **diy.com**

For individual manufacturer's guarantee terms and conditions see page 90.
For B&Q guarantee terms and conditions visit diy.com. Your legal rights are not affected.

Cardivik with Regent surround

Other models available see **diy.com** for full details and pricing

Back panels and hearths also available – see pages 74, 75

Model shown

Fire

Cardivik electric stove

See page 49

H558 x W448 x D240mm
Black
5023539020009

£160

Search for 'focal point cardivik' on **diy.com**

Surround

Regent

• Assembly required

H1022 x W1100 x D185mm
White 5023539013971

£218

Search for 'focal point regent on **diy.com**

MDF back panel & hearth set

H980 x W1250 x D380mm
White marble effect
5023539026520

£198

Search for 'back panels and hearths' on **diy.com**

Gothenburg with Nebraska surround

Other models below available see **diy.com** for full details and pricing

Back panels and hearths also available – see pages 74, 75

Model shown

Fire

Gothenburg

See page 52

H558 x W436 x D237mm
Black 5023539022799

£280

Search for 'focal point gothenburg' on **diy.com**

Surround

Nebraska

- Classic arch
- Self-assembly required

H1120 x W1300 x D185mm
White
5023539014251

£162

Search for 'focal point nebraska' **on diy.com**

Reversible laminate back panel & hearths

Granite/stone effect

Back panel H930 x W930 x D30mm
5023539026148

£52

Hearth H1334 x W362 x D30mm
5023539026155

£38

Search for 'back panels and hearths' **on diy.com**

Fireside accessories

9'' Shovel
5015772192018
£6

Spark guard
Black 5015772185515
£18

Coal hod
Black 5015772185027
£20

Stove fan
5015772193008
£37

Willow log basket
5015772199901
£22

Kubu log basket
5015772196016
£26

Lined log basket
5015772899887
£28

Log bag
5015772892802
£12

Fireside starter set
5015772190960
£34

Companion set
Black 5015772185430
£20

Electric stove pipe
H280 x W130 x D230mm
Black 5023539015425
£26

Decorative flue pipe
Perfect match for Torva stove on page 51

H195 x W122 x D195mm
Cream 5030478715866
French grey 5030478715880
Black 5030478715514
£24

Selected products are available for home delivery only to selected locations, restrictions may apply. Delivery charges may apply.
For full details see diy.com/customer-support/delivery. **Prices correct as of 9 September 2022.**

Fireside accessories

Black

1 **Logs and kindling set**
Black
5015772181609 **£32**

2 **Matchstick holder**
- Matchstick holder with striker
- Matches not included

Black
5015772198836 **£6**

3 **Curved fire screen**
Black
5015772188387 **£34**

4 **Loop top companion set**
Black
5015772399004 **£24**

5 **Coal chute**
Black
5015772179347 **£22**

6 **Ornate log holder**
Black
5015772187366 **£32**

Pewter effect

1 **Logs and kindling set**
Pewter effect
5015772181616 **£34**

2 **Matchstick holder**
- Matchstick holder with striker
- Matches not included

Pewter effect
5015772181753 **£6**

3 **Curved fire screen**
Pewter effect
5015772181746 **£36**

4 **Loop top companion set**
Pewter effect
5015772181739 **£26**

5 **Coal chute**
Pewter effect
5015772188141 **£24**

6 **Ornate log holder**
Pewter effect
5015772487367 **£34**

Copper effect

1 **Logs and kindling set**
Copper effect
5015772181630 **£34**

2 **Matchstick holder**
- Matchstick holder with striker
- Matches not included

Copper effect
5015772181654 **£6**

3 **Curved fire screen**
Copper effect
5015772181678 **£36**

4 **Loop top companion set**
Copper effect
5015772181661 **£26**

5 **Coal chute**
Copper effect
5015772181685 **£26**

6 **Ornate log holder**
Copper effect
5015772181692 **£34**

Brass effect

1 **Logs and kindling set**
Brass effect
5015772181623 **£34**

2 **Matchstick holder**
- Matchstick holder with striker
- Matches not included

Brass effect
5015772181647 **£6**

3 **Curved fire screen**
Brass effect
5015772181777 **£36**

4 **Loop top companion set**
Brass effect
5015772181760 **£26**

5 **Coal chute**
Brass effect
5015772184488 **£24**

6 **Ornate log holder**
Brass effect
5015772587364 **£34**

Selected products are available for home delivery only to selected locations, restrictions may apply. Delivery charges may apply.
For full details see diy.com/customer-support/delivery. **Prices correct as of 9 September 2022.**

Helping you shop

From ordering and delivery to finance options, there's everything here to help you create a home you love. For full terms and conditions, please visit diy.com. Your statutory rights are not affected.

Fire product guarantees

For full guarantee terms and conditions visit –

UP
www.beldray.com/
guarantee-registration.html

Katel
https://www.katell.co.uk/
terms-and-conditions/

Bemodern
www.diy.com//bemodern-guarantee

Dimplex
www.dimplex.co.uk/terms
www.valor.co.uk/terms

Focal Point
http://www.focalpointfires.co.uk/products/faqs/
guarantee/

Slemcka
https://www.houseandhomestyle.co.uk/slemcka-
warranty/

B&Q Kingfisher
https://www.diy.com/
customer-support/policies/terms/

This does not affect your legal rights.

Ordering and delivery

Available for home delivery

Selected items are available to order for delivery direct to your home. Available for selected locations, restrictions apply Delivery charges may apply. See diy. com for further details. When buying on diy.com we'll tell you the delivery time during the checkout. If ordering in store please ask.

Store delivery service

If you're not able to get your items home from store why not use our store delivery service? This service enables you to have your items delivered to the ground floor of choice in your home. Ask your local store for details on their delivery area. Charges apply.

Van hire

B&Q has teamed up with Hertz 24/7 to offer you a convenient hourly van hire service to take your purchases home. In three easy steps you could be driving your van home from any of our participating stores.*

In order to drive, you must be over the age of 21 and have held your licence for at least a year. You also need to hold a credit or Visa debit card in your own name. Registration is simple and you can be on the road in minutes!

*Participating stores only. Please visit our store locator on diy.com to see if your nearest store is participating. Terms and conditions apply click please visit www.hertz247.com/bq for further details. †Applies to selected products and locations only. Restrictions apply. Check diy.com for availability.

Finance it your way

Interest Free Credit

Spread the cost of your whole heating project over a term to suit you

Spend £250 for 3 months or £500 for 6 months on Fires and Heating projects - 0% APR representative. Please see diy.com/finance for more details. Credit subject to status. We reserve the right to remove this offer at any time.

B&Q Limited acts as a credit broker, authorised and regulated by the Financial Conduct Authority (FRN 712268).

Terms and conditions

Ordering and delivery

Available for home delivery

Selected items are available to order for delivery direct to your home. Available for selected locations, restrictions apply. Delivery charges may apply. See diy.com for further details. When buying at diy.com we'll tell you the delivery time during the checkout. If ordering in store please ask.

Store delivery service

If you're not able to get your items home from store why not use our store delivery service? This service enables you to have your items delivered to the ground floor of choice in your home. Ask your local store for details on their delivery area. Charges may apply.

Ordering & delivery FAQs

Will all of my home delivered items arrive together?

You can select the same delivery date for several products at the checkout at diy.com. However, items delivered by different partners may arrive separately and at different times.

Do you deliver to my address?

We're currently unable to deliver online orders to the Republic of Ireland, Jersey, Guernsey, Isles of Scilly, Scottish Islands (including Isle of Skye, Isle of Arran, Isle of Colonsay, Isle of Cumbrae, Isle of Jura, Isle of Coll, Isle of Eigg, Isle of Rhum, Isle of Canna), Orkney Islands, Outer Hebrides and BFPO addresses.

Bulk products will be delivered to the kerbside outside of your address. You'll be advised at the checkout if this is the case, and you'll be responsible for moving these items onto your property.

Can B&Q let me know the time of my delivery?

Some of our delivery partners may contact you in advance by phone or by text message and may let you know either an estimated arrival time or confirm an am/pm delivery slot. If this applies to your order, we'll let you know before you check out and in your confirmation email.

When will my home delivery order arrive?

For the majority of products on diy.com, we'll either be able to let you know, or let you choose, a delivery date before you check out. For all other products, we'll let you know that we'll be in touch by phone or text message to arrange a delivery date.

Deliveries may be made between 8am and 6pm.

When can I collect my Click + Collect order?

If you order before 7pm Monday to Friday or 4pm Saturday and Sunday, your Click + Collect order will be available from 1pm the next day in your chosen store.

Please note that we have some stores where your order will take two days to be ready and can then be collected after 6pm (this includes stores in Northern Ireland and on the Isle of Man, please see www.diy.com/click-collect for the full list).

Find out more about when your order will be ready for collection on our Click + Collect page on diy.com/click-collect

If you don't collect your order straightaway, we'll hold it in store for you for 7 days. If it's not been collected after 7 days, one of our team will be in contact with you.

Where do I collect my Click + Collect order from?

Your Click + Collect order will be available at the Click + Collect point in your chosen store. Look for the Click + Collect signs in the checkout area.

About our products

All products are subject to availability.

All prices are correct at time of going to press and may be subject to change. Whilst we try to ensure accurate colour representation, please be aware that the photographic process may sometimes alter colours. Some items in our photographs are included for display purposes and are not necessarily intended to be installed as shown with regard to proximity. Please refer to the instructions supplied with your product before installation. A summary of this price guide is available in Braille, large print or on audio cassette. Please ask at your local store for more details.

Finance

At B&Q we have a number of different finance options to suit your needs which could help you fund your purchase.

To see how our finance products could make your dream project more affordable, just visit your local store and ask a member of staff for details or visit diy.com/finances.

Spend £250 for 3 months or £500 for 6 months on Fires and Heating projects - 0% APR representative. Please see diy.com/finance for more details. Credit subject to status. We reserve the right to remove this offer at any time. **B&Q Limited acts as a credit broker, authorised and regulated by the Financial Conduct Authority (FRN 712268)**.

Doing your bit

The UK's Waste Electrical and Electronic Equipment (WEEE) regulation aims to ensure the waste of electrical and electronic equipment is disposed of in an environmentally friendly way. You can take back any unwanted small electrical products, or if you've purchased a larger, like-for-like product from us, to a B&Q store free of charge. Where you've purchased a large like-for-like electrical product from us within 28 days, we can collect it for a fee per item by calling 0333 014 3529. Visit diy.com for more details.

Returns policy

Please keep your receipt for anything you buy from us. It'll ensure we can help you if you need to bring something back.

If you return a product unused, with the original receipt within 90 days of purchase (or delivery where applicable) we'll exchange the product or issue a refund based on the original method of payment. For purchases made by debit/credit card, the same card must be used to process the refund. B&Q customer sales forms are an acceptable form of receipt.

Products that have been cut, made to measure or mixed to your requirements cannot be exchanged or refunded.

Your consumer rights are not affected

If the product you purchase is faulty, or not as described, we may offer an exchange, refund or repair as appropriate, in accordance with your consumer rights.

Ways to return your items

In the first instance, return via home delivery or diy.com

Contact us on 0333 014 3357.

Lines are open 8am-8pm Monday to Saturday and 10am-4pm Sunday.

Email us at home.delivery@b-and-q.co.uk

Write to us at B&Q Customer Services Centre, North Avenue, Clydebank, West Dunbartonshire, G81 2NT.

Alternatively, return your items to your local B&Q store

You'll need to take the product, your receipt/sales advice and the debit/credit card you used for payment with you.

Contacts

If you would like to leave feedback about your experience in our stores please let us know.

Email us

You can contact us using our customer support form.

Call or write to us

For questions relating to orders placed for home delivery, please call our dedicated line on 0333 014 3357.

Monday-Saturday 8am-8pm, Sunday 10am-4pm.

For general enquiries call 0333 014 3098. Monday-Friday 8am-8pm, Saturday 8am-5pm, Sunday 10am-4pm.

Or write to us at B&Q Customer Services Centre, North Avenue, Clydebank, West Dunbartonshire, G81 2NT.

Registered office B&Q Limited, Chestnut Avenue, Chandlers Ford, Hampshire SO53 3LE

Follow us

FSC www.fsc.org FSC® C013937

The mark of responsible forestry

Ask us about FSC® Certified products

PEFC PEFC/16-37-510 Promoting Sustainable Forest Management www.pefc.co.uk

recycle

When you have finished with this brochure please recycle it

Prices correct as of 9 September 2022. Prices and availability may have changed since the publication of this brochure. Customers are advised to check current prices and availability online at diy.com before purchasing.

Visit us at diy.com

B&Q Limited, Hampshire, S053 3LE
BOOK1685 © September 2022 (UK stores only)