ASSEMBLY INSTRUCTIONS & USAGE GUIDE

90cm 200kg Boltless Shelving Assembly



NOMAD

Important
Please note: The **three** shelving units come in **two** boxes. We recommend removing and laying out all parts before starting to assemble.

Total Parts Check List
Parts list below will make all **three** shelving units.

A	 90cm Upright	x24
B	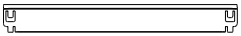 Side Beam 45cm or 60cm	x30
C	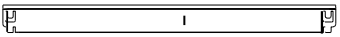 90cm Front/Back Beam	x30
D	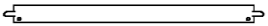 Centre Support 45cm or 60cm	x15
E	MDF Board 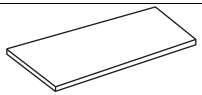	x15
F	Upright Connector 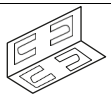	x12
G	Plastic Feet 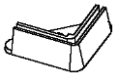	x24

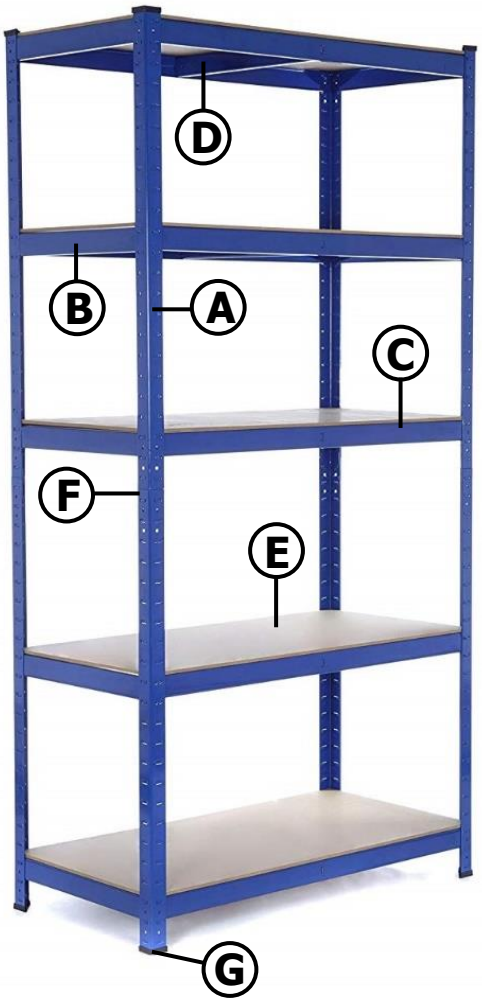

Information

If in doubt, please contact us:

- Read this guide thoroughly before commencing assembly and retain for future reference.
- Before commencing assembly, unpack carefully and check that all components ordered are included.
- Assembly should be undertaken by a minimum of two competent people.
- Tools required – Small Rubber Mallet. Screwdriver (optional).
- We recommend products over 2000mm high are fixed to the wall where possible.

Caution

During assembly, ensure to:

- Take care during assembly and in use, particularly when lifting or stretching & when using tools.
- Wear appropriate clothing - protective gloves and footwear are recommended.
- Build on a suitable level floor, which is strong enough to support the load and allow adequate working space.
- Dispose of packaging materials responsibly.

Warning

Rules for safe use of shelving:

- Ensure these instructions are retained for reference and that users are aware of the rules for safe use.
- Never climb on the structure or stand on the shelving.
- Do not lean or support ladders, steps, or other objects against shelving.
- Always use safety steps to reach high shelves.
- Load heavy items on the lower shelves & lighter items on the higher shelves.
- This product is designed for hand loading only.
- Ensure that the maximum load carrying capacities are not exceeded.
- Please refer to the loading information supplied for details.

Important
We advise against using in damp, wet or humid conditions. If used in a damp, wet or humid environment, we recommend MDF shelving boards are treated with a high-quality wood varnish or sealant.

1 Take two of the uprights (A) and two plastic feet (G). Attach one of the plastic feet to each of the two uprights. Tap into place with a rubber mallet if required.

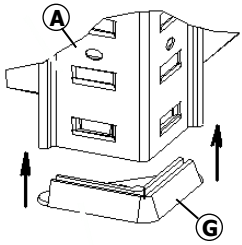

2 Insert a side beam (B) into one of the uprights (A). This should be placed at the required level of the lowest shelf. Make sure all metal tabs stay on the inside of the uprights. Small adjustment may be needed with a screwdriver. Tap into place with a rubber mallet.

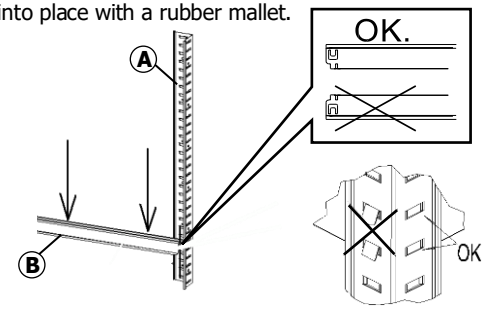

3 Insert the other end of the side beam (B) into the same height slot on the second upright (A).

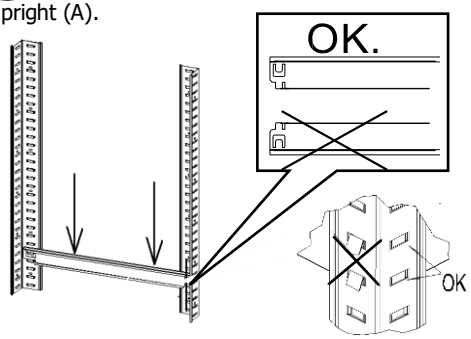

Tip: Ask another person to hold the frames while you secure them. Or can help to lean against a wall.

4 Repeat this process, with another two uprights (A), two plastic feet (G) and one side beam (B).

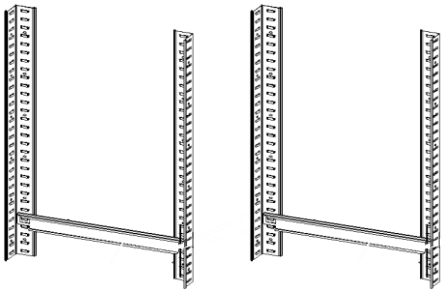

5 To complete the outside of the base layer, take two 90cm front/back beams (C) and insert into the uprights (A), at the same height as the side beams. Tap into place with a rubber mallet.

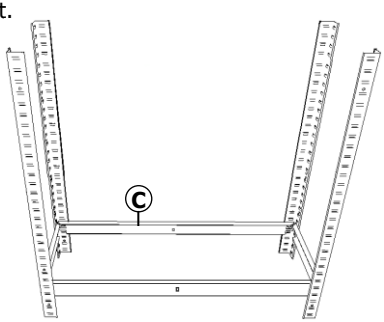

6 Take one centre support (D) and slightly bend the end tabs. Insert into the slots on the inside of the front/back beams (C). Ensure the tabs are bent fully back to secure into place.

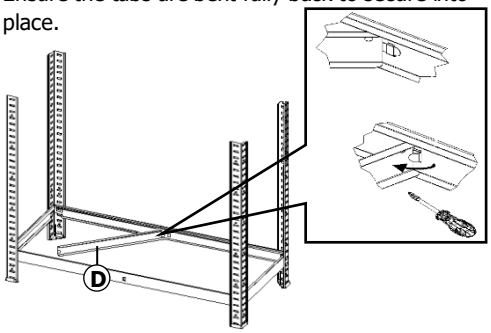

7 Now place the first MDF board into place. Tip: Place the uncut corners into place first, then press down to fit the board to the frame.

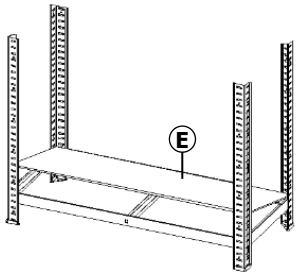

8 Repeat steps 2-6 to fit another shelf above the first one. Tip: Leave at least two slots free at the top of the uprights (A)

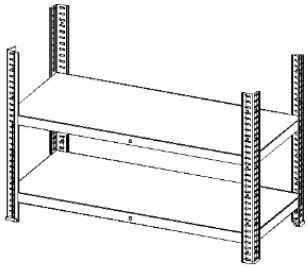

9 Insert one upright connector (F) onto each of the four base uprights (A). Then add the remaining four uprights (A) onto the connectors to give a total height of 180cm.

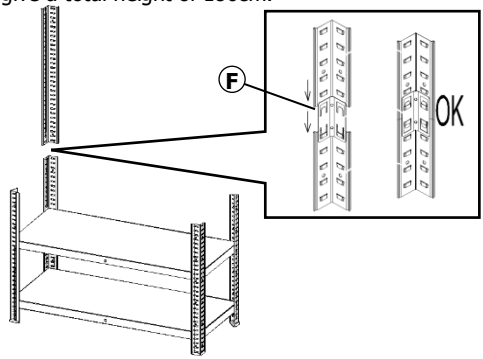

10 Repeat steps 2-6 to install the remaining three shelves. You should now have your first completed shelving unit.

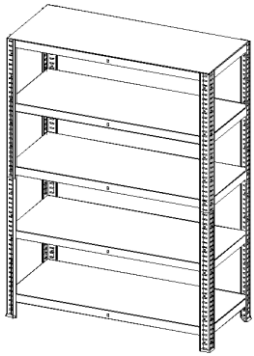

11 We recommend securing shelving units to the wall. Each of the uprights (A) has a couple of pre-drilled holes in to allow for this. Please use the correct fixings for the wall construction.

To secure a run of shelving units together, we recommend using heavy duty cable ties or nuts and bolts through the pre-drilled holes.

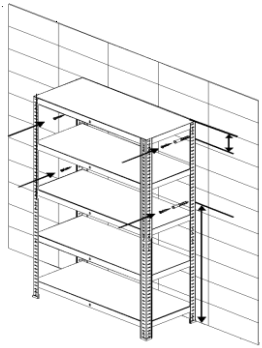

We have tried our best to made these assembly instructions as clear and easy to follow as possible. However, if you have any questions or require help, please don't hesitate to contact us. Many thanks……Racking Monkey.

★★★★★

If you're happy with your purchase we would really appreciate a 5 star review on Amazon. If you're not happy for whatever reason please contact us so we can help out.

Nomad Group
Unit 3B Gun Hill Poultry Farm, Horam, TN21 0LA