USER GUIDE

GREENHOUSE

IMPORTANT

- You must read these instructions carefully before you start to assemble this greenhouse.
- Please ensure that you find all parts in the carton box in the correct type and quantity as mentioned in the list illustrated in every page accordingly.
- Please carry out the steps in the order set out in these instructions.
- Do not tighten the steps in the greenhouse until completing on the assembly of the polycarbonate panels.
- Keep these instructions in a safe place for future reference.

SAFETY ADVICE

- We strongly recommend the use of work gloves during assembly.
- Do not attempt to assemble the greenhouse in windy or wet conditions.
- Do not touch overhead power cables with the aluminum profiles.
- Always wear shoes and safety goggles when working with extruded aluminum. Dispose of all plastic bags safety-keep them out of reach of small children.
- The greenhouse must be positioned and fixed on a flat level surface.
- Do not lean against or push the greenhouse during construction.
- Keep children away from the assemble area.
- Do not position your greenhouse in an area exposed to excessive wind.

- Do not attempt to assemble this greenhouse if you are tired, have taken drugs or alcohol or if you are prone to dizzy spells.
- If using a step ladder or power tools ensure that you follow the manufactures safety advice.
- Hot items such as recently used grills, blowtorches etc. must not be stores in the greenhouse.
- Ensure there are no hidden pipes or cables in the ground before inserting the pegs.
- This is a multi-part assembly, allow at least 300 minutes for assembly.
- Selecting a site--choose a sunny level position away from overhanging trees.
- If you are fixing your greenhouse directly to a solid concrete foundation use the pre-drilled holes in the metal base supplied.
- The component parts should be checked and laid out close at hand. Keep all small parts(screws etc) in a bowl so they do not get lost.
- Note that the door is hinged on the right hand side and therefore opens to the right.
- Keep roof clear of snow and leaves.

EQUIPMENT REQUIRED

- Silicone sealant & applicator bradawl phillips screwdriver step ladder.
- Tape measure large hammer scissors.
- Work gloves drill spirit level Lubricant see over for contents plastic or rubber mallet 0.08" metal drill bit.
- If help is required seek professional advise within store.

COMPONENT

D1: (x1)
D4: (x1)

D2: (x1)

D3: (x2)

W1: (x1)

W2: (x2)

W3: (x1)

W4: (x1)

4R: (x2)
4L: (x2)
5: (x1)

17R: (x1)
17L: (x1)

6: (x1)

7: (x4)
16: (x4)

8R: (x2)
8L: (x2)

9: (x2) 10R: (x1) 10L: (x1)
19: (x6) 20: (x6)

13: (x1)

18: (x1)

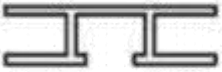

12: (x5)
15: (x1)

14: (x1) 22: (x4)
23: (x4)

25R: (x2)
25L: (x2)

B2: (x18)

B3: (x6)

B4: (x4)

B5: (x4)

B6: (x2)

B7: (x1)

B8: (x1)

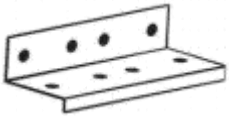

B9: (x2)

B10: (x2)

S5: (x2)

S6R: (x2)
S6L: (x2)

S7: (x2)

S8: (x1)

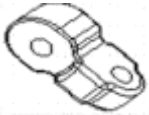

S9: (x1)

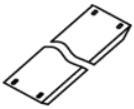

1: (x2) 2L: (x2)
2R: (x2)

3: (x4)

F4: (x128)

F6: (x2)

F8: (x1)

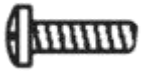

F9: (x1)

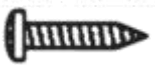

F1: (x8)

F2: (x4)

F5: (x42)

F3: (x24)

PC Boards Quantities

P1: 2PCS	P4L: 2PCS	P8: 8PCS
P2: 1PC	P5: 1PC	P9: 7PCS
P3: 4PCS	P6: 1PC	P10: 1PC
P4R: 2PCS	P7: 1PC	

Summary Statement For Polycarbonate Panel

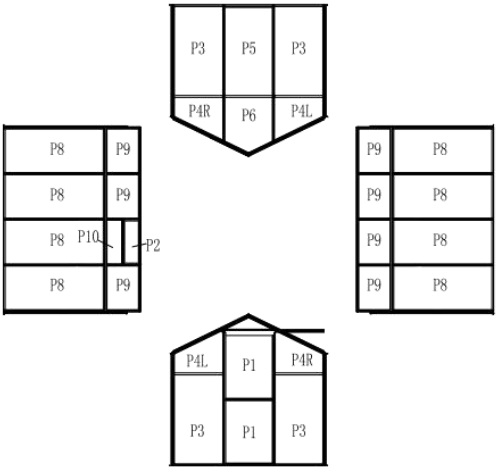

*The UV-protected side of the sheet is covered with transparent film and must face towards the sun.

"Hexagonal Screw" Installation

- Place the "hexagonal screw" into the groove, turn clockwise until it stops turning.
- Adjust the "hexagonal screw" by hand and twist so threads fix it in place.
- Place other parts on "hexagonal screw" and assemble nut.

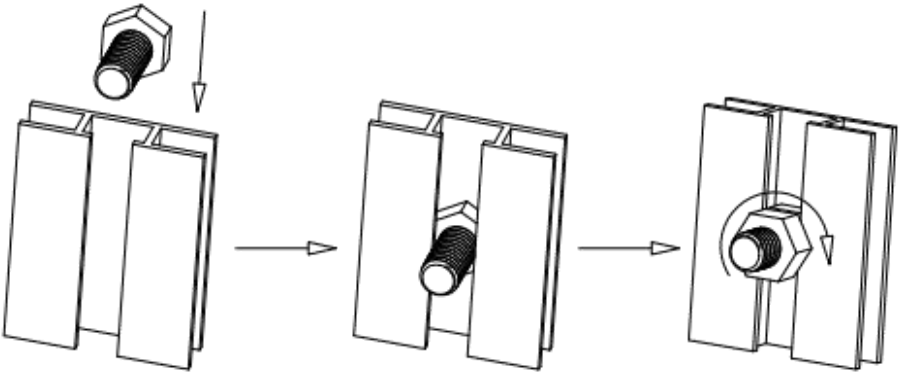

INSTALLATION

Step 1:

Install the door of the greenhouse first as shown in the picture.

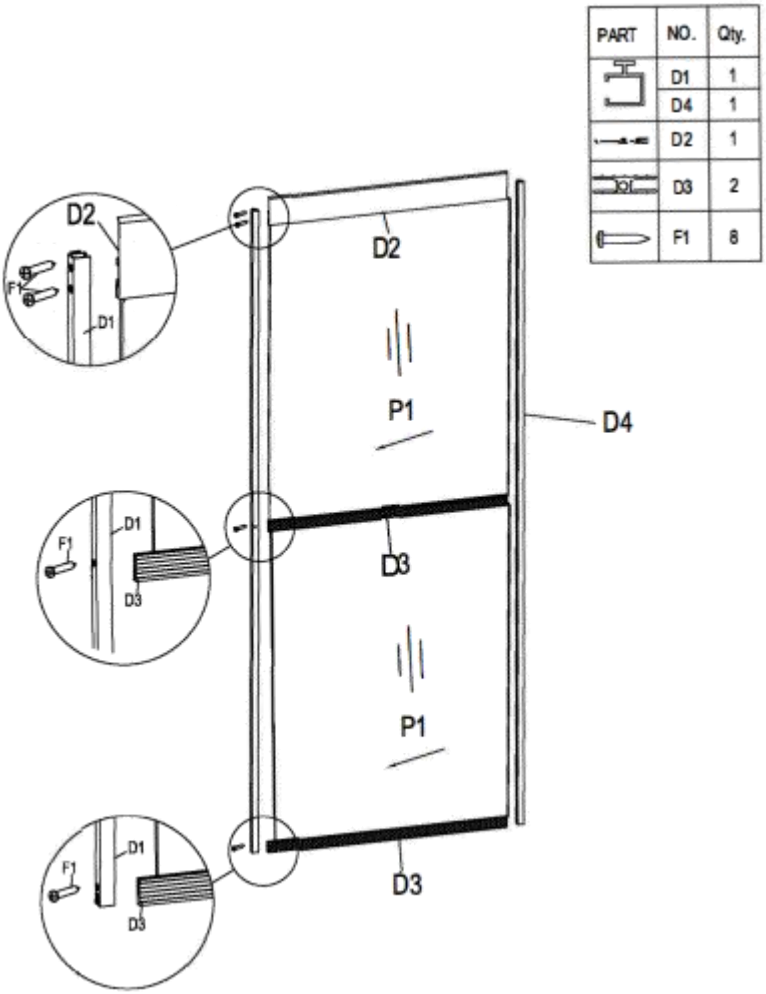

Step 2:

Install the windows of the greenhouse as shown.

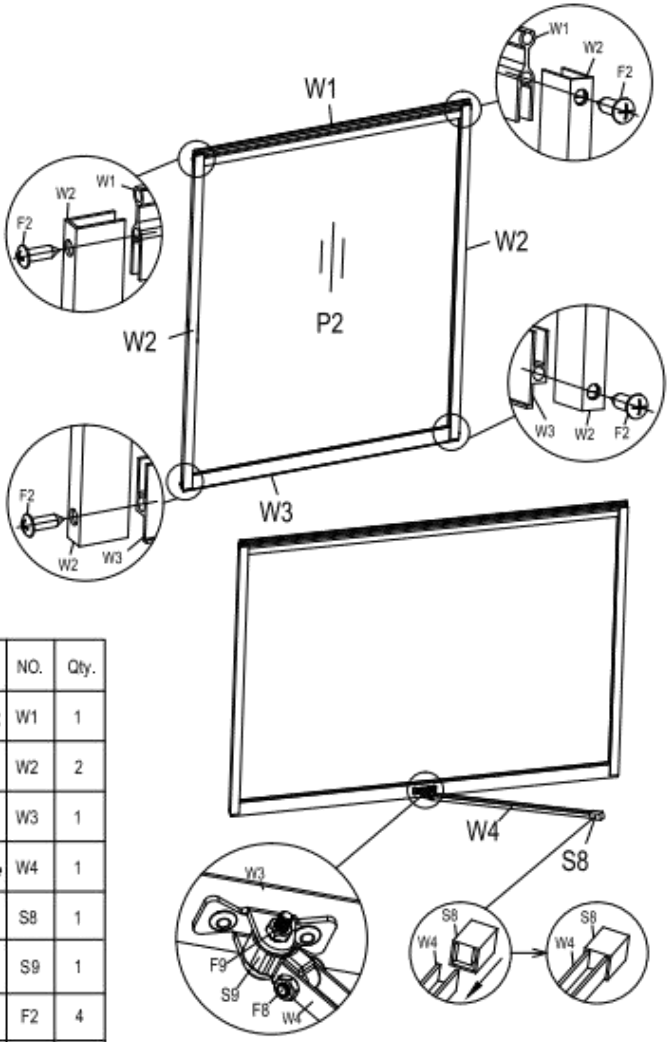

PART	NO.	Qty.
	W1	1
	W2	2
	W3	1
	W4	1
	S8	1
	S9	1
	F2	4
	F9	1
	F8	1

Step 3:

Attach 4L to 4R with B9 and F5, and then insert 5pcs F4 to the corresponding position.

Insert F4 to 5 and 6 as shown. Attach 8L to 8R with B10, and then insert 5pcs F4 to the corresponding position. Attach 17L to 17R with B8, and then insert 5pcs F4 to the corresponding position.

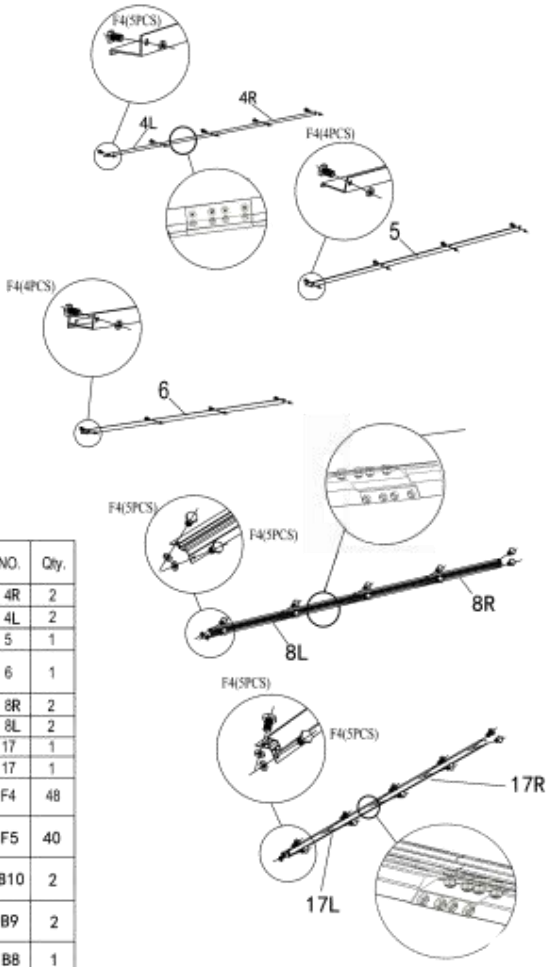

PART	NO.	Qty.
	4R	2
	4L	2
	5	1
	6	1
	8R	2
	8L	2
	17	1
	17	1
	F4	48
	F5	40
	B10	2
	B9	2
	B8	1

Step 4:

Attach 4R to 4L with B9. Attach 5 and 6 to 4R and 4L with four 7 and tighten them with F4. Then attach 10R and 10L to the middle of 5. Insert F4 to 10R and 10L and two 7 as shown.

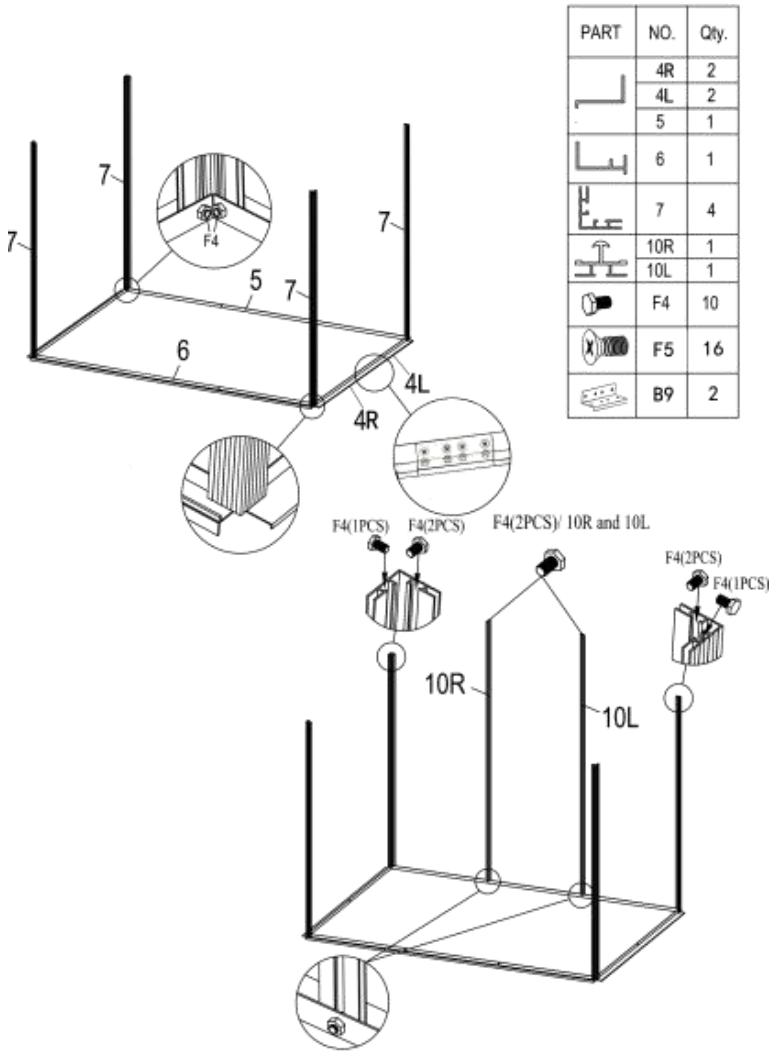

PART	NO.	Qty.
	4R	2
	4L	2
	5	1
	6	1
	7	4
	10R	1
	10L	1
	F4	10
	F5	16
	B9	2

Step 5:

Install the back of the greenhouse as shown.

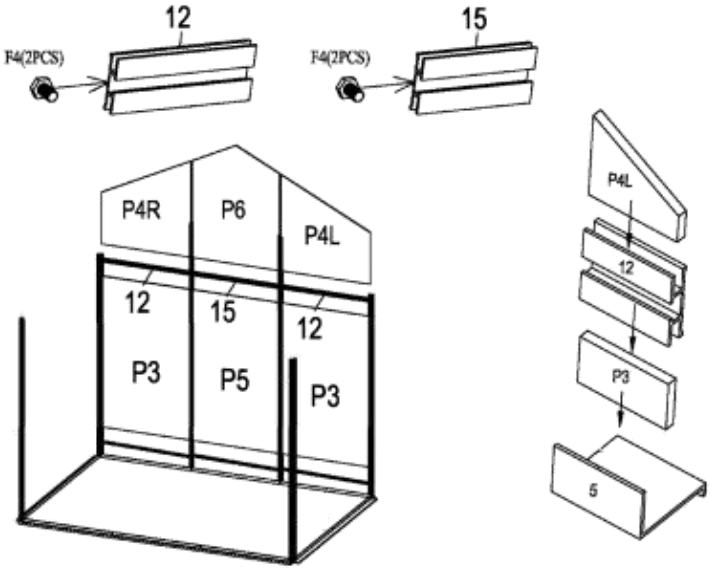

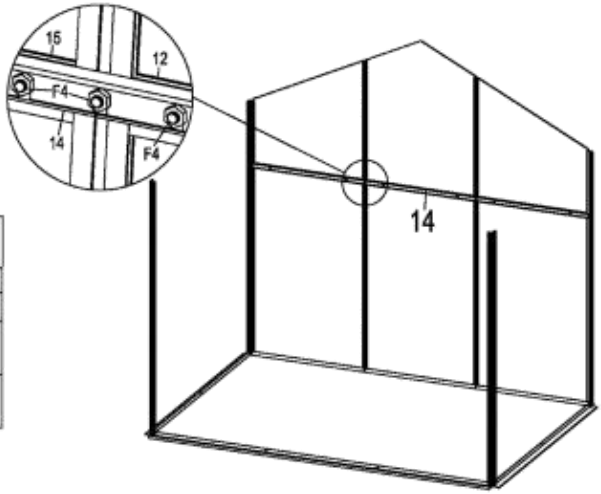

PART	NO.	Qty.
	12	2
	15	1
	14	1
	F4	6

Step 6:

Install the front pillars of greenhouse as shown.

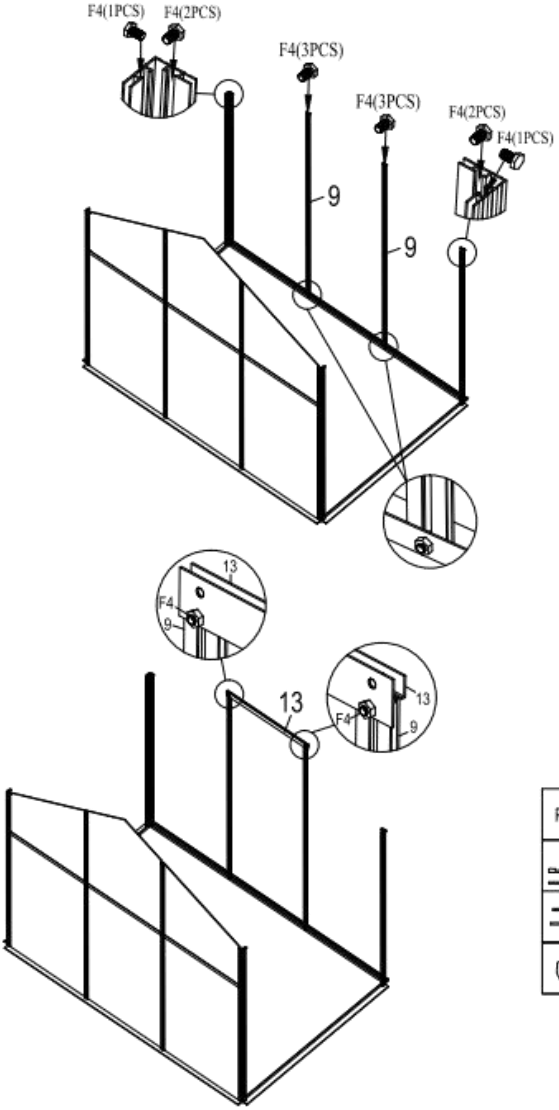

PART	NO.	Qty.
	9	2
	13	1
	F4	12

Step 7:

Attach P4R to P3 with F4 and 12, attach P4L to P3 with F4 and 12. Install B3 to the corresponding positions of front board.

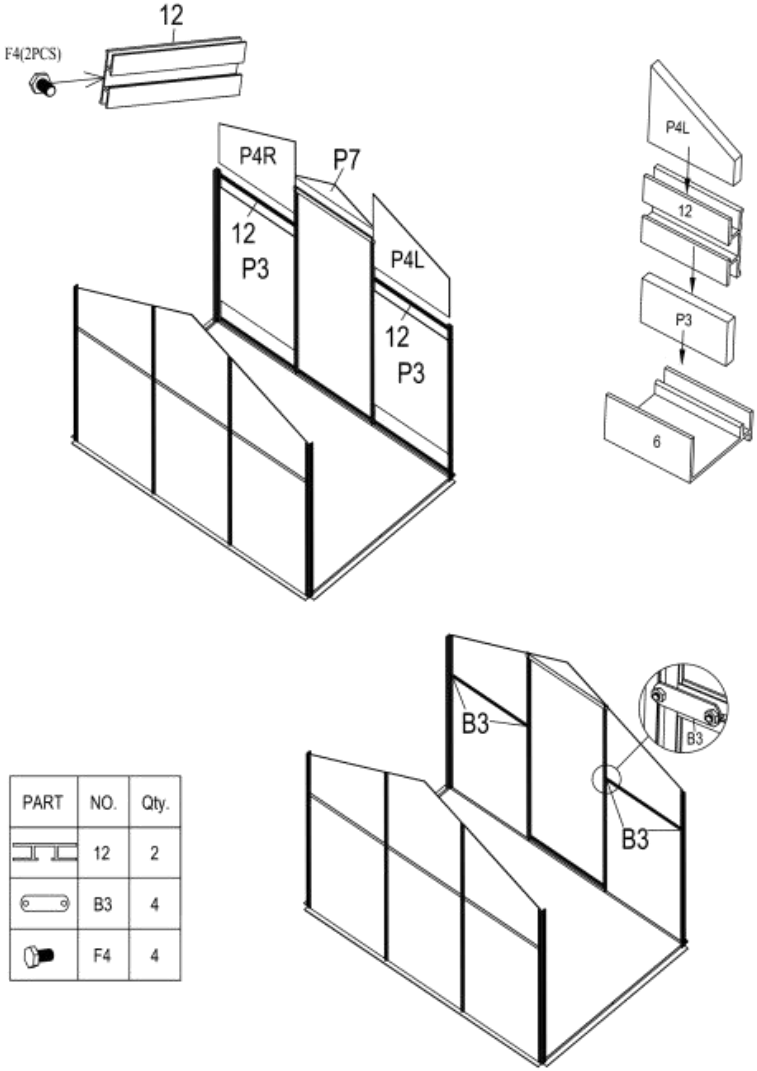

PART	NO.	Qty.
	12	2
	B3	4
	F4	4

Step 8:

Attach 8L and 8R to the top of the greenhouse with B10 and F4. Insert F4 to the corresponding positions of the back of greenhouse as shown. Attach four 16 to the top of the greenhouse with 16, 8R and F4.

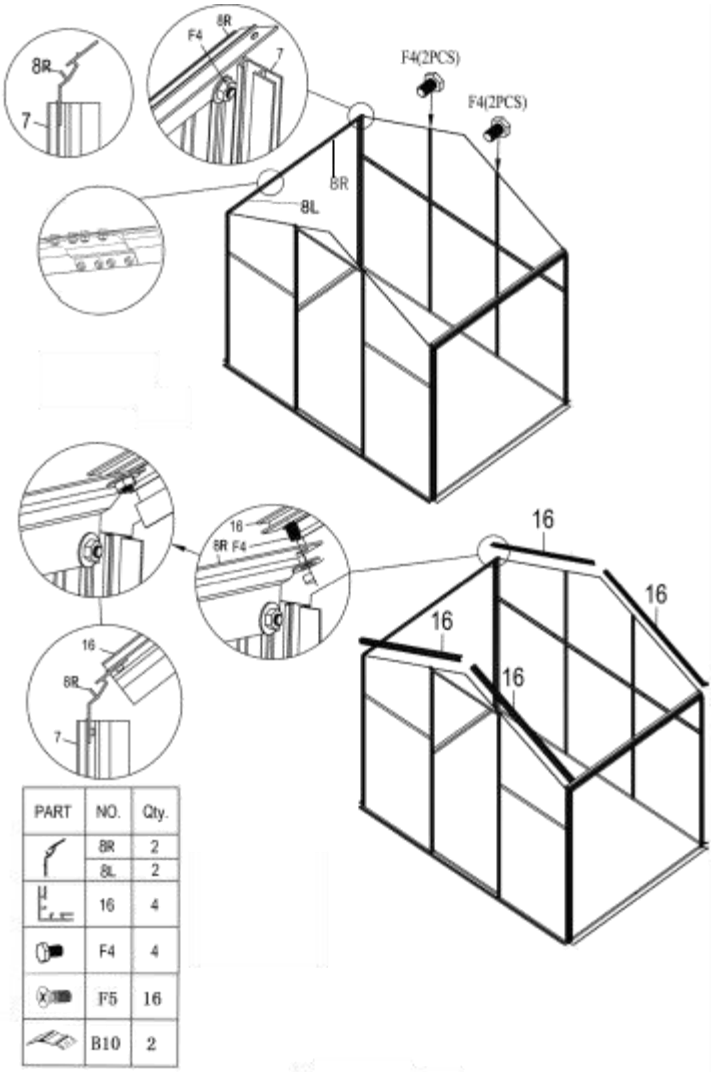

PART	NO.	Qty.
	8R	2
	8L	2
	16	4
	F4	4
	F5	16
	B10	2

Step 9:

Tighten four 16 with F4. Attach 17L and 17R with B8. Attach 17L and 17R to 16 with F4. Attach B4 to the corresponding positions of 16 with F4 and F6 as shown.

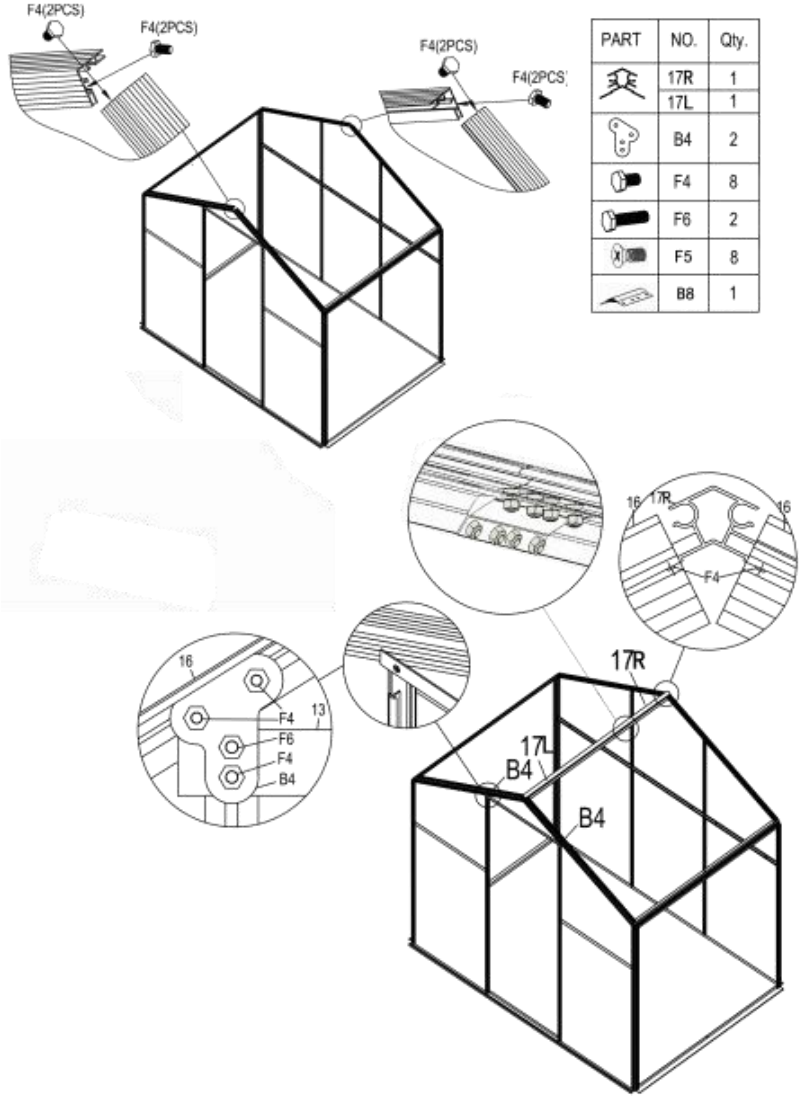

PART	NO.	Qty.
	17R	1
	17L	1
	B4	2
	F4	8
	F6	2
	F5	8
	B8	1

Step 10:

Attach B5 to four pillars with F4 as shown. Then attach B4, B6 and 18 to the corresponding positions as shown in the picture.

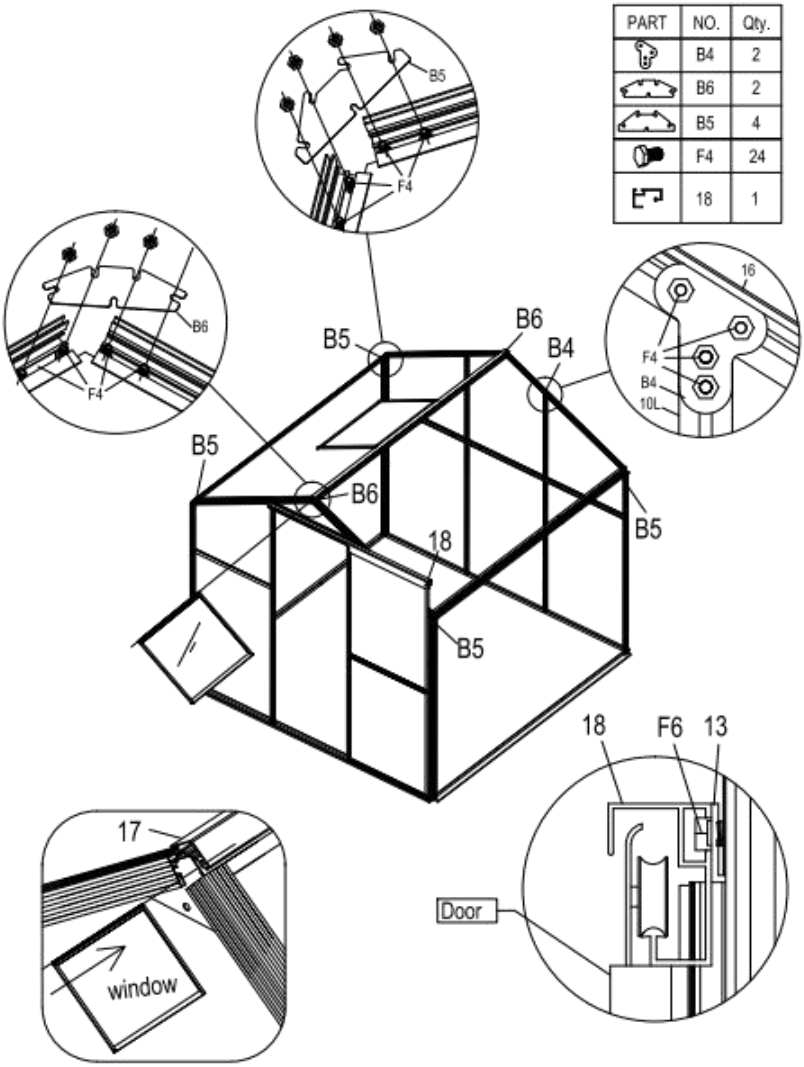

Step 11:

Attach 19 and 20 with F4 to the corresponding positions as shown in the picture.

Note: Please insert 1 screw in the two profile aluminum 20 beside the windows.

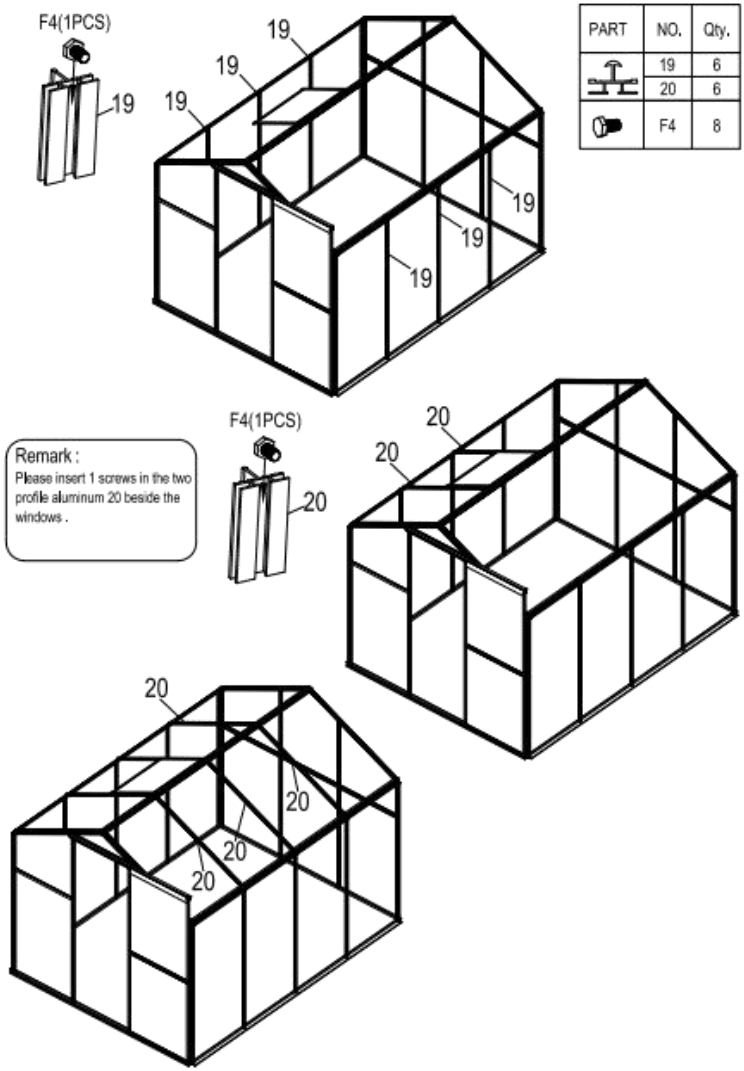

Step 12:

Attach B7 and B3 to 12 with F4. Attach 22 and 23 to the corresponding positions as shown.

Note: B7 is used to hold the window guide W4 when the window is closed.

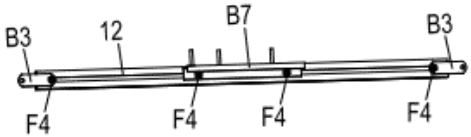

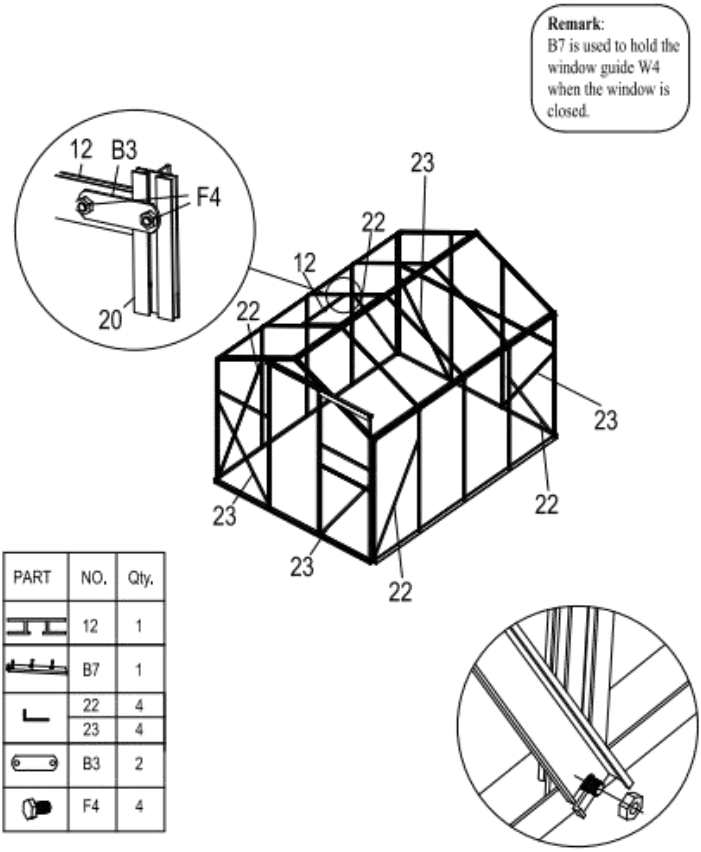

PART	NO.	Qty.
	12	1
	B7	1
	22	4
	23	4
	B3	2
	F4	4

Step 13:

Install P8 on the side of the greenhouse and P10 and P9 on the roof.

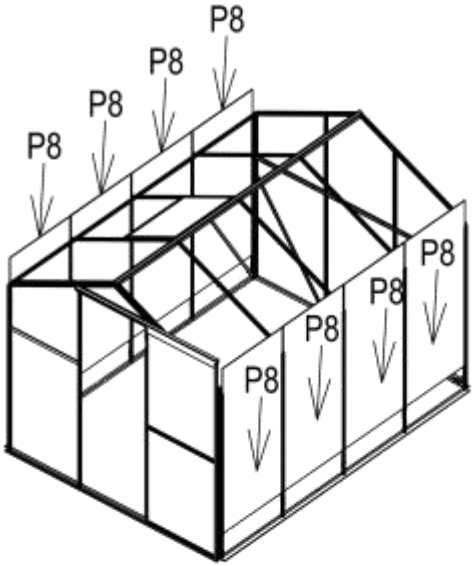

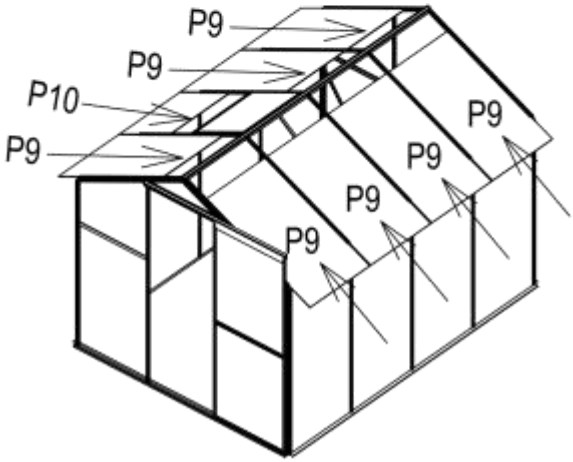

Step 14:

Attach 25R and 25L to the top of the greenhouse. Install S5, S6R, S6L and S7 to the top of the greenhouse respectively as shown.

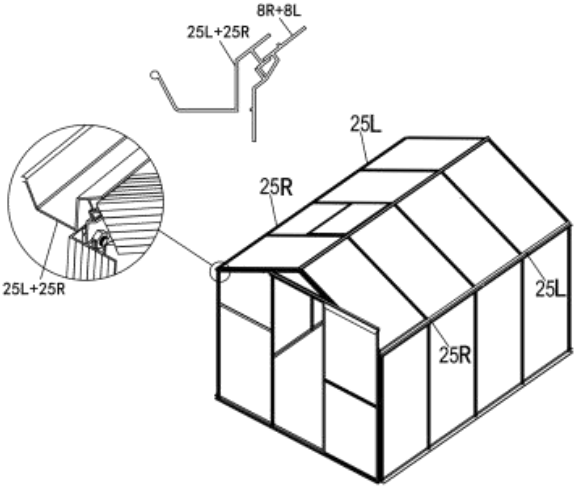

PART	NO.	Qty.
	25R	2
	25L	2
	S5	2
	S6R	2
	S6L	2
	S7	2

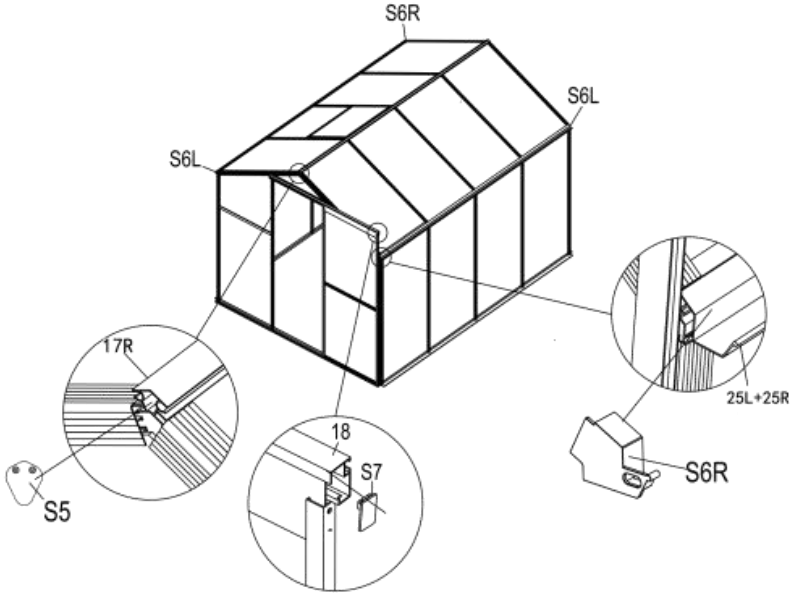

Step 15:

Attach two 1 to 2R and 2L, and attach four 3 to the bottom of frame, tighten them with F3. Put the greenhouse frame on the rectangular frame.

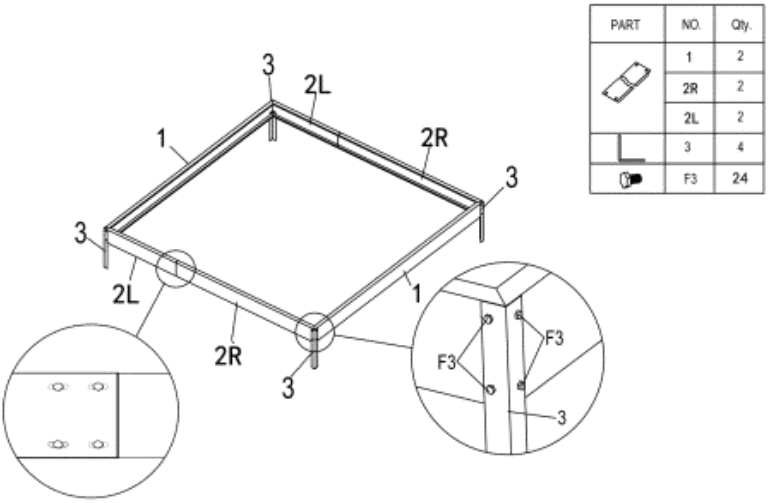

PART	NO.	Qty.
	1	2
	2R	2
	2L	2
	3	4
	F3	24

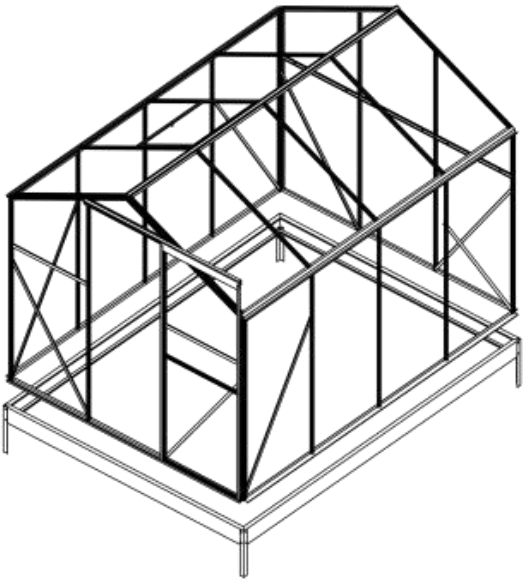

Step 16:

As shown in the picture, use B2 to tighten the whole greenhouse.

PART	NO.	Qty.
	B2	18

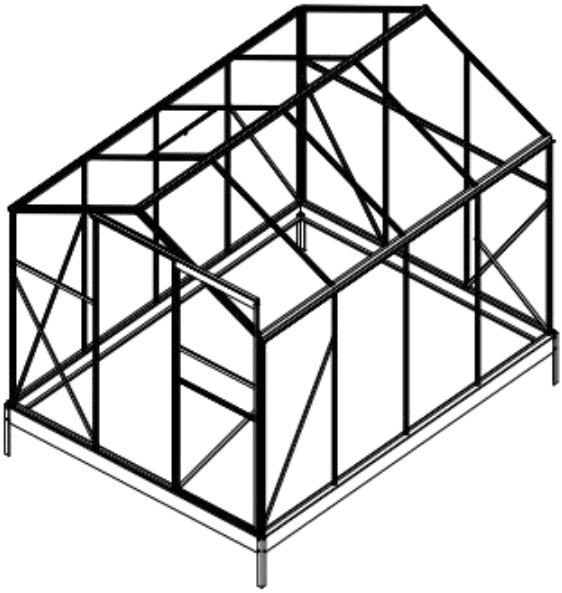

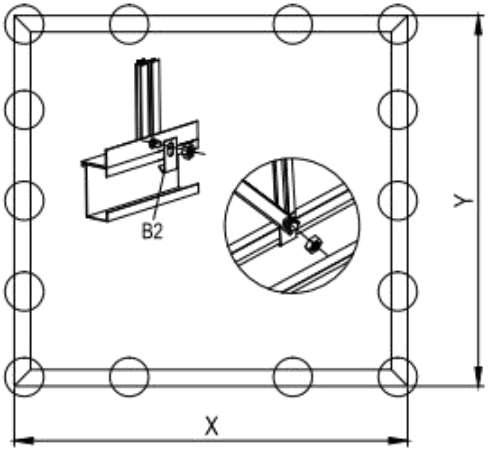

CARE & MAINTENANCE

- When your greenhouse needs cleaning, use a mild detergent solution and risen with cold clean water.
- Do NOT use acetone, abrasive cleaners or other special detergents to clean the clear panels.

Living and Home
A Home is for Living in

For comfort and style update your living space.
Browse contemporary and classic designs and find the perfect home to your look and the perfect spot to lounge.
Put your feet up and sink into our stylish home decor.
We are mainly engaged in home, outdoor, home appliances, office, bathroom, provided high quality and affordable products for you. We value every one of our customers and our professional service team is always available to help you.

livingandhome.co.uk