USER GUIDE



CRYSTAL ACRYLIC CEILING LIGHT

SAFETY & WARNINGS

- Recommend installation of this lighting fixture be done by a licensed electrician.
- Warning switch off the main electrical supply from the main fuse microcircuit breaker before installation.
- The installer and/or user must read, understand and follow these instructions before installing the product. This product must be properly installed before it is used.
- Please make sure that you have all parts indicated before you begin assembly of this item.
- To reduce the risk of fire, electrical shock or injury to persons or property, please follow the guideline below for safe use and installation.

INSTALLATION DRAWINGS

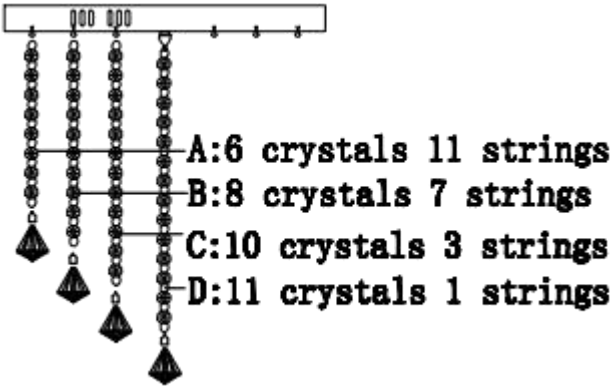

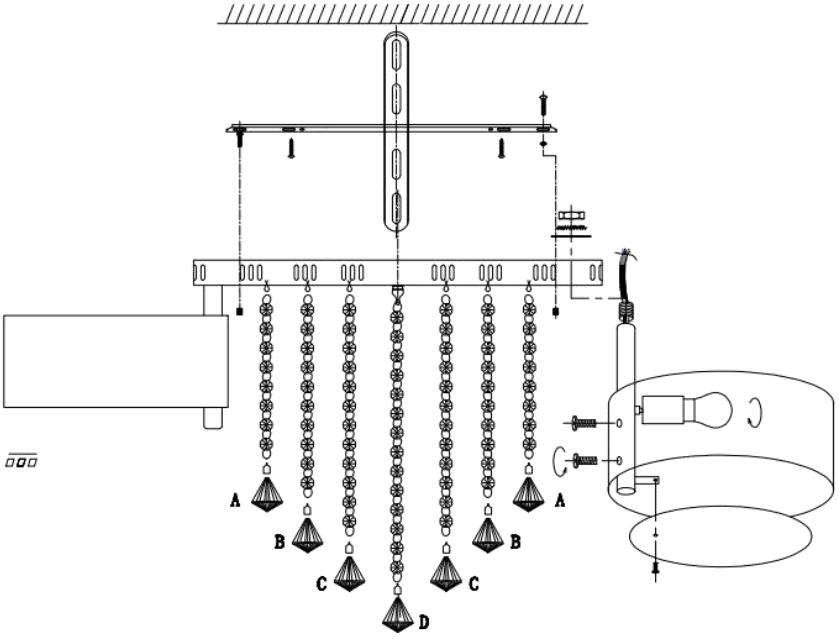

WIRING DIAGRAM

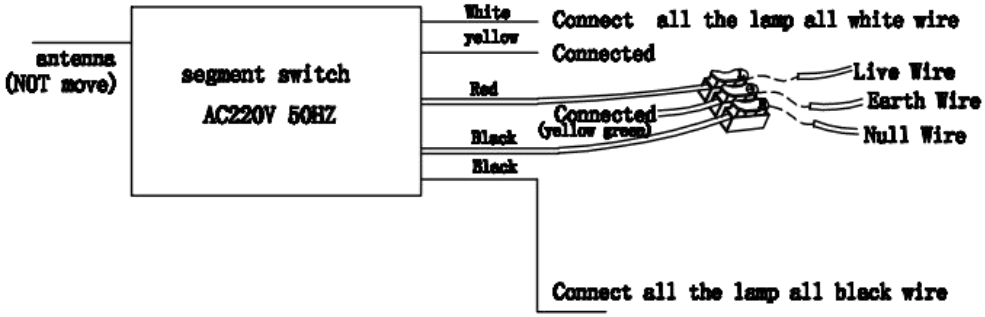

REMOTE CONTROL DIAGRAM

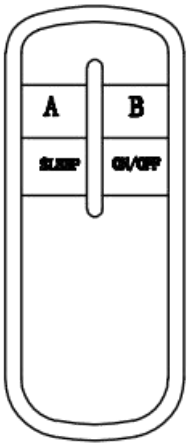

A: Control Auxiliary Light Source RGB.

B: Control main light source.

SLEEP: Keep all light sources dormant.

ON/OFF: Switch all light sources.

CLEANING & CARE

- To clean the outside of the fixture, use a dry or slightly dampened clean cloth (use clean water, never a solvent) to wipe the surface of the fixture.
- To clean the inside of the fixture, first disconnect power to the fixture by turning off the circuit breaker or by removing the fuse at the fuse box.
- Use a dry or slightly dampened clean cloth (use clean water, never a solvent) to wipe the interior surface of the fixture.
- Do not use any cleaners with chemical, solvents or harsh abrasives. Use only a dry soft cloth to dust or wipe carefully.

Living and Home
A Home is for Living in

For comfort and style update your living space.
Browse contemporary and classic designs and find the perfect home to your look and the perfect spot to lounge.
Put your feet up and sink into our stylish home decor.
We are mainly engaged in home, outdoor, home appliances, office, bathroom, provided high quality and affordable products for you. We value every one of our customers and our professional service team is always available to help you.

livingandhome.co.uk