USER GUIDE

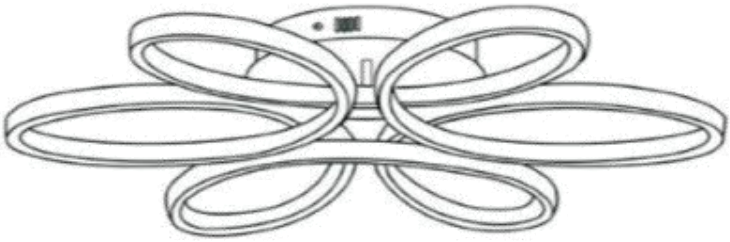

SEMI CEILING LIGHT

SAFETY GUIDANCE

- Incorrect installation and use can cause necessary damage and harm. Please read the instruction carefully before use for your safety and better use of this product.
- **Warning**: Follow the instruction to install and use to prevent personal safety accidents, such as lamp damage, falling down, electric shock, fire, etc.. Do not dismantle the lamp or replace any parts.
- Do not use power beyond the rated range (nominal voltage 220/10%, frequency 50 Hz). (Using power beyond the rated voltage range for a long period of time may cause damage to the lamp.)
- Do not install the lamp above the objects in hot or humid areas. (Do not install the lamp above an oven, gas or exhaust pipes to avoid damage.)
- The wiring of the power should not be connected in series with other appliances and parallel counters should not be used.
- Please find a professional electrician to check and repair the lamp. (Unprofessional repair and replacement of parts can be life-threatening.)
- If there is anything abnormal about the lamp, cut off the power and report to a processional.
- **Warning**: Before installation of the light, cut off the power to avoid electric shock.
- Please find a professional to install this product for your safely use.
- Please wear gloves during installation. If there are stains or sweat on the hardware, remove them in time.
- The lamp must be firmly installed when installing a fixed lamp. Ensure that the installation medium can bear the weight of the lamp body. After installation, the lamp body should be checked whether it' s fixed on the ceiling to make sure that the lamp will not fall.

SPECIFICATIONS

Product Name: Ceiling Lamp
Power Supply: 74W / 220V-240V
Light Source: LED
Size of the Light: 58cm

SCREW FITTING



(x4)



(x4)



(x4)



(x1)

INSTALLATION

Step 1

Please turn off the main power supply.



Step 2

Drill the mounting holes for mounting plate on the ceiling.

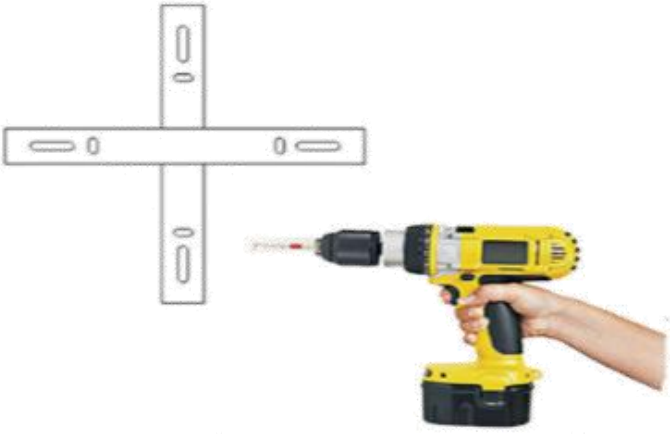

Step 3

Fix the mounting plate by corresponding screws.

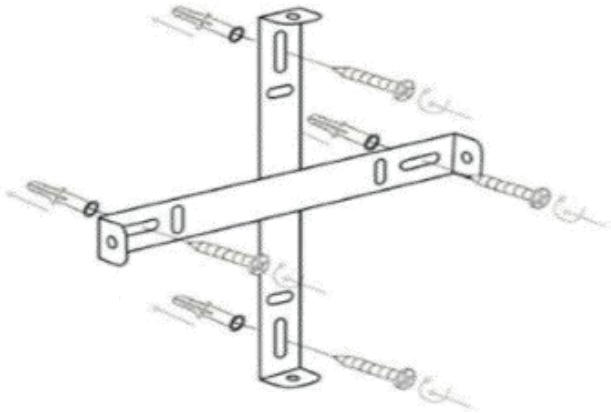

Step 4

Connect the wire on power adapter to the wire on the frame. Tips: Red wire to red, then black wire to black.

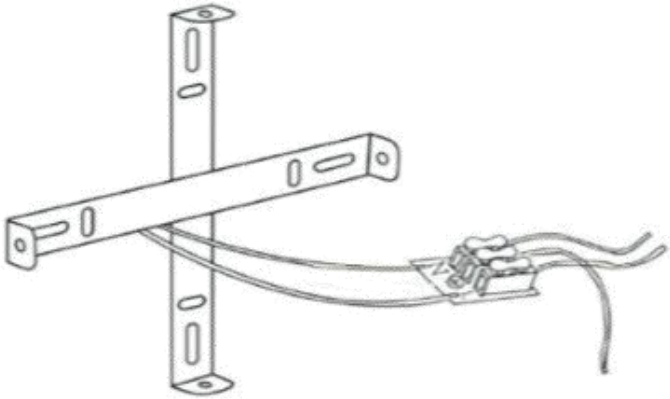

Step 5

After the lamp is installed, connect the wire on the power adapter to the wire on the wall, test whether the lamp is normally lit, turn off the power after the normal lighting, and then fix the lamp body on the mounting plate and fix it with screws.

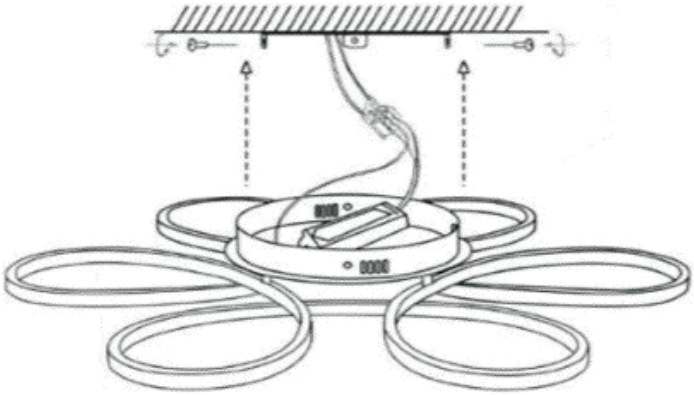

Step 6

After the installation check whether it' s all fixed. Then turn on the power to light.

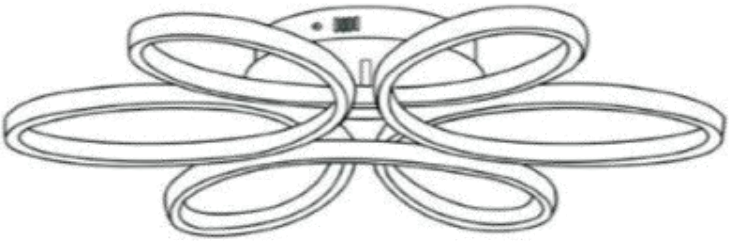

Direction for Use

- Don't touch or scratch the surface of the light with hard object.
- Don' t hang things on the lamp or dry the clothes with the lamp.

CLEANING & CARE

- **Note:** Please clean and check the lamps once every 6 months.
- Regular cleaning and inspection (every 6 months) should be taken for the safe and effective use of this product. When cleaning the lamp, cut off the power. (During the repair process, the appropriate product model must be provided and the contents of the light displayed must be viewed.) Use soft cloth to wipe it clean. Do not use to clean, otherwise loss of color and damage to the lamp will occur.
- When cleaning the lamp body, gently wipe it with a soft dry cotton cloth. Don' t use wet cloth or other volatile liquid.
- When cleaning the lampshade, please use a clean feather duster to tenderly swipe the surface to avoid fouling the lampshade or causing deformation.
- **Warning:** Cut off the power and wait until it's fully cool down before cleaning and other operation.

Living and Home
A Home is for Living in

For comfort and style update your living space.
Browse contemporary and classic designs and find the perfect home to your look and the perfect spot to lounge.
Put your feet up and sink into our stylish home decor.
We are mainly engaged in home, outdoor, home appliances, office, bathroom, provided high quality and affordable products for you. We value every one of our customers and our professional service team is always available to help you.

livingandhome.co.uk