# DAVEN II

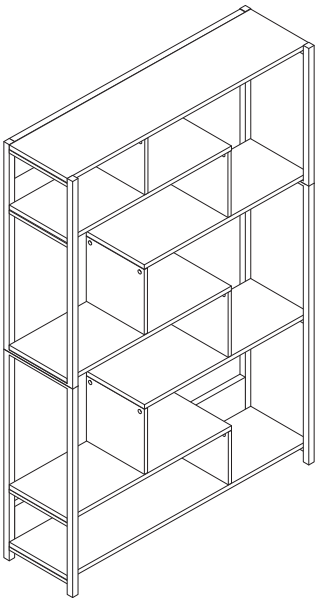

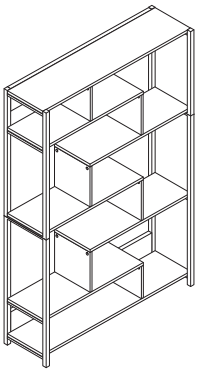

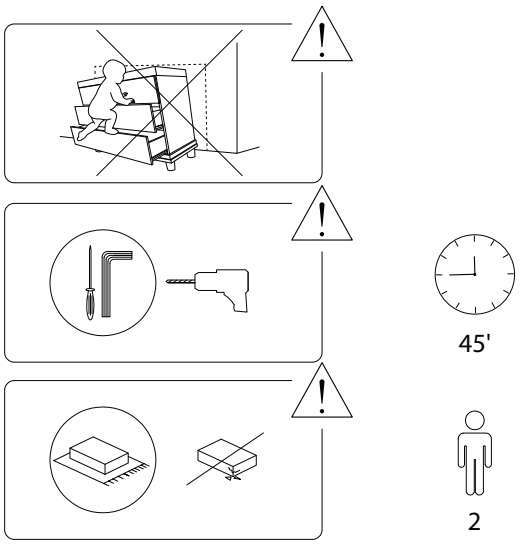


1/23



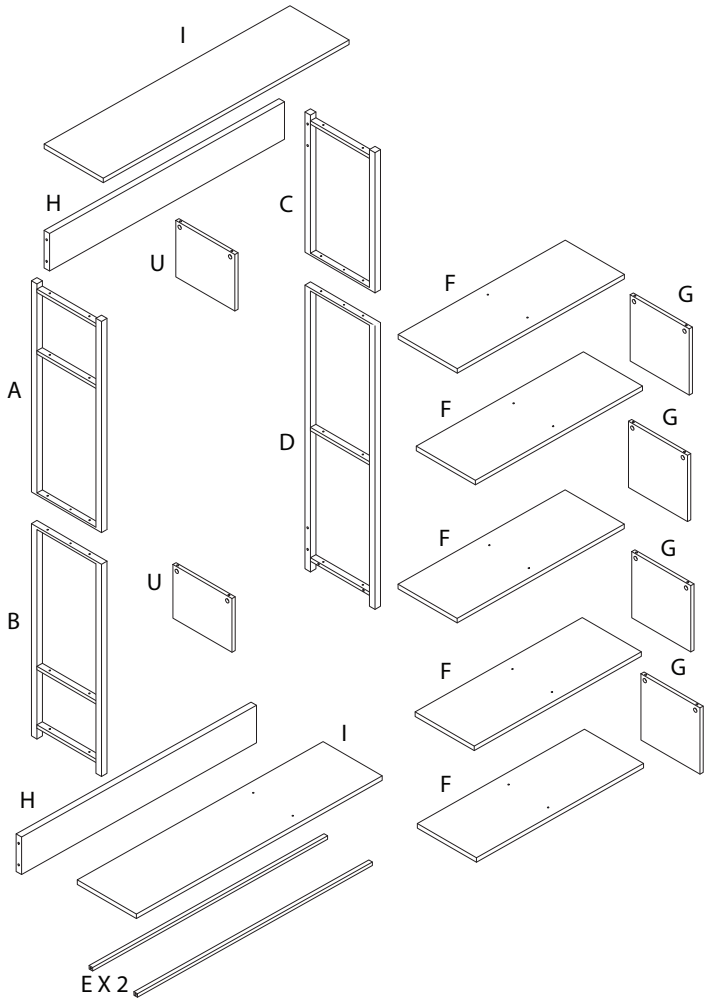


2/23



| | | |
|---|---|---|
| A<br>x 1 | B<br>x 1 | C<br>x 1 |
| D<br>x 1 | E<br>x 2 | F<br>x 5 |
| G<br>x 4 | H<br>x 2 | I<br>x 2 |

3/23

| J | K | L |
|---|---|---|
|   |   | 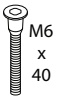  |
| x 4 | x 18 | x 12 |
| **M** | **N** | **O** |
|  |  |  |
| x 20 | x 12 | x 20 |
| **P** | **Q** | **R** |
|   |  | 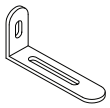 |
| x 5 | x 1 | x 1 |
| **S** | **T** | **U** |
|  |  | 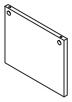 |
| x 7 | x 1 | x 2 |

| V | W |
|---|---|
|   |   |
| x 1 | x 2 |





## 1

| A | B | S | T | W |
|---|---|---|---|---|
|  |  |  |  |   |
| x 1 | x 1 | x 1 | x 1 | x 1 |

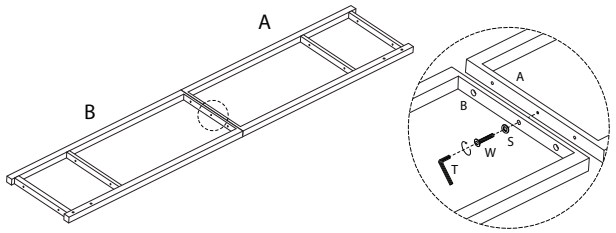


## 2

| C | D | S | T | W |
|---|---|---|---|---|
|  |  |  |  |   |
| x 1 | x 1 | x 1 | x 1 | x 1 |

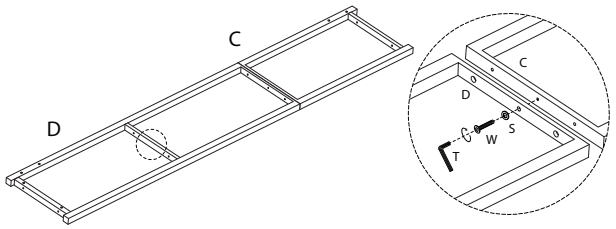






## 3

| M |
|---|
|  |
| x 8 |

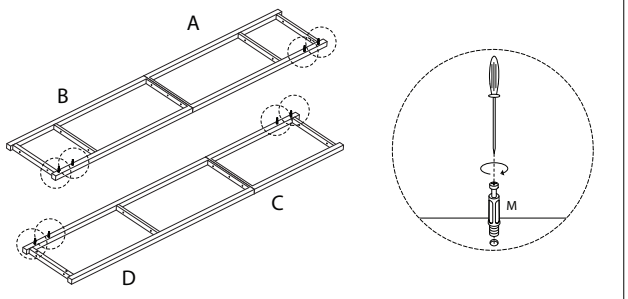


## 5

| H |
|---|
|  |
| x 2 |

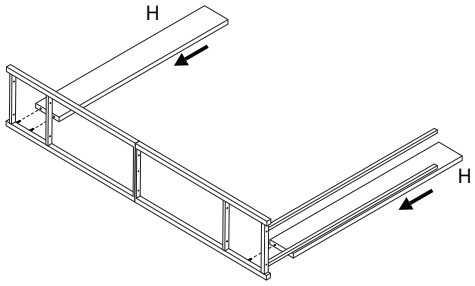


## 4

| E | J | S | T |
|---|---|---|---|
|  |   |  |  |
| x 2 | x 2 | x 2 | x 1 |

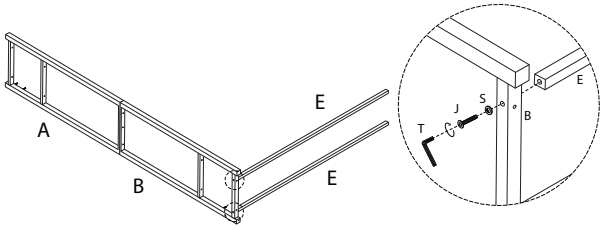






## 6

| O |
|---|
|  |
| x 4 |

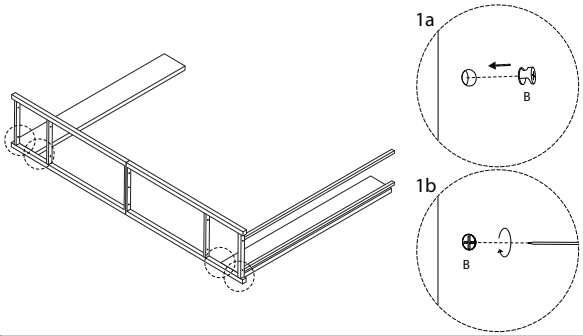

7

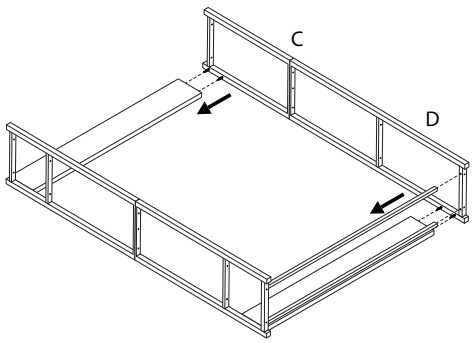


8

J
M6 x 35
x 2

S
x 2

T
x 1

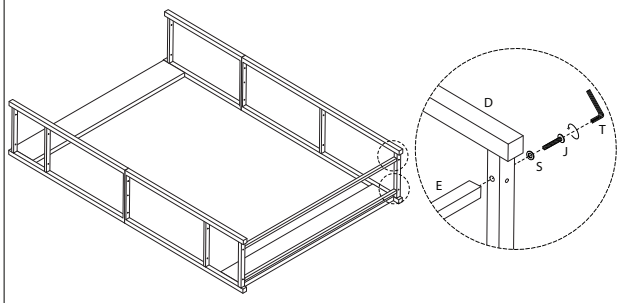






9

O
x 4

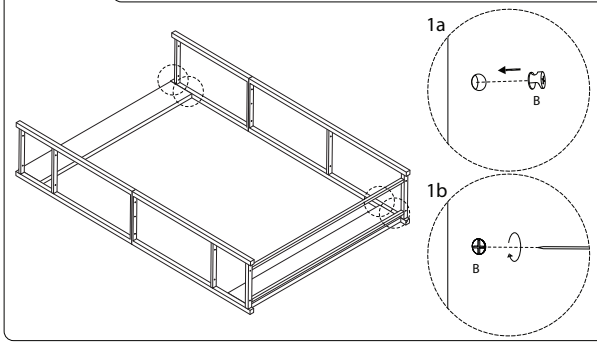


10

I
x 1

K
M6 x 30
x 4

P
M3 x 35
x 2

T
x 1

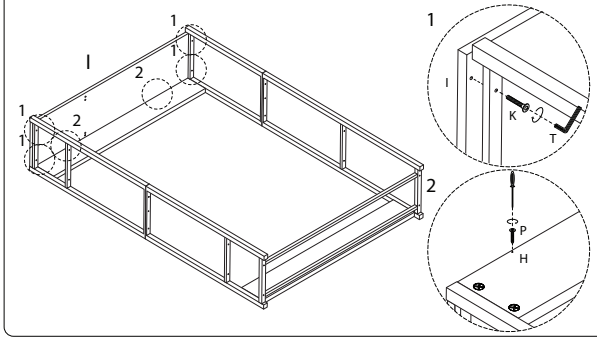






11

M
x 2

N
x 2

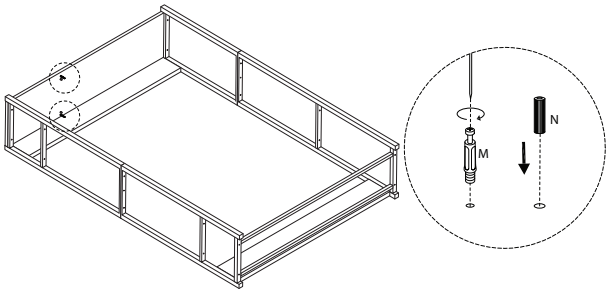


12

U
x 1

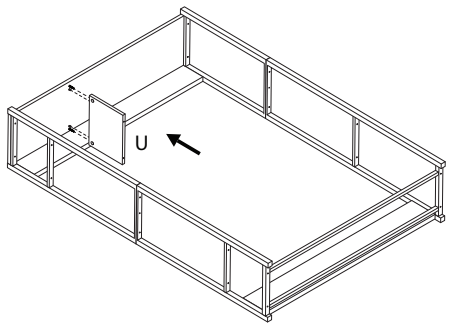






13

O
x 2

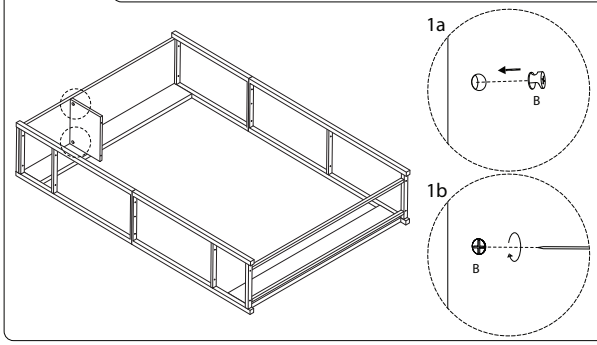


14

F
x 1

K
M6 x 30
x 2

L
M6 x 40
x 2

T
x 1

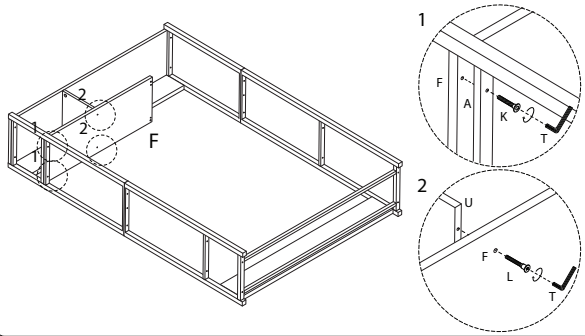

15

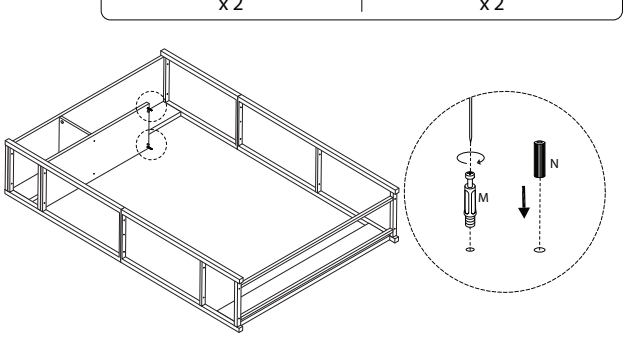


16

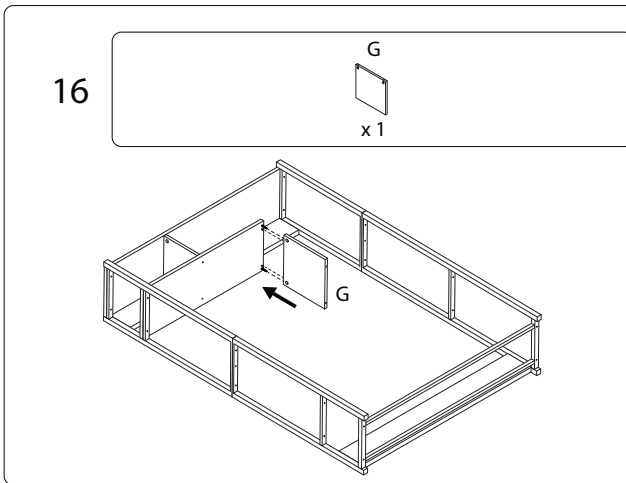






17

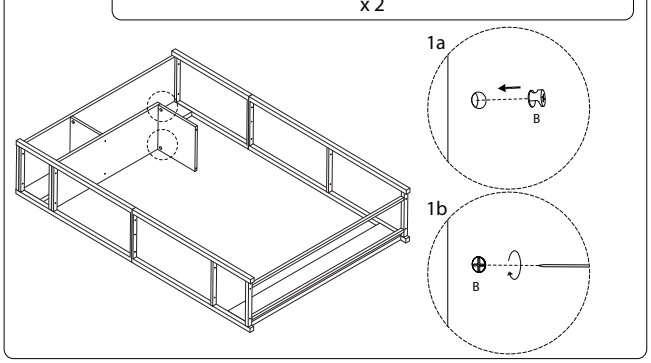


18

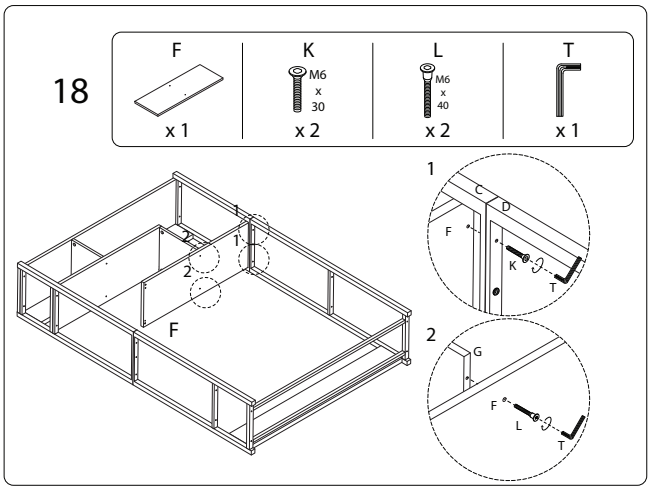






19

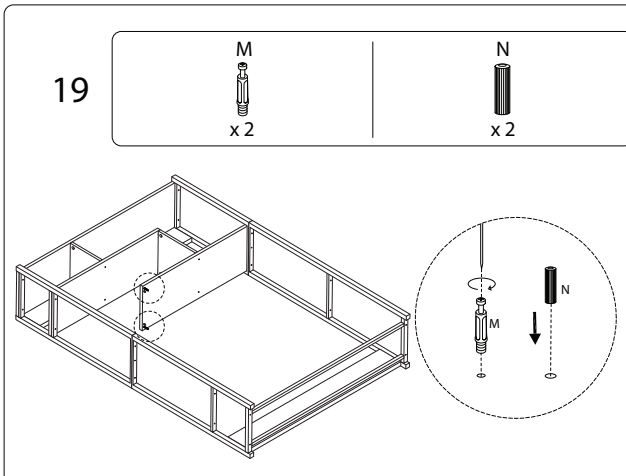


20

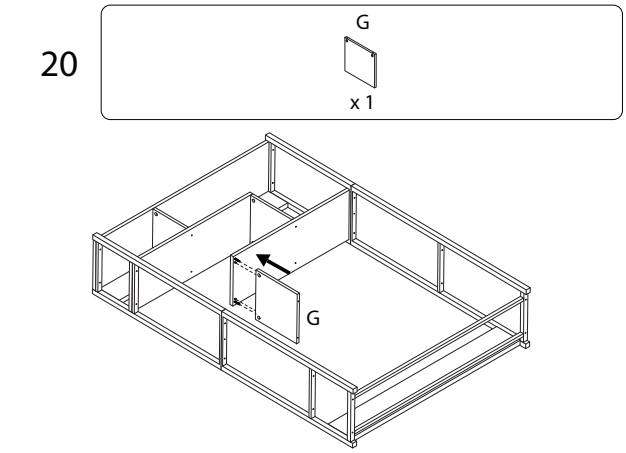






21

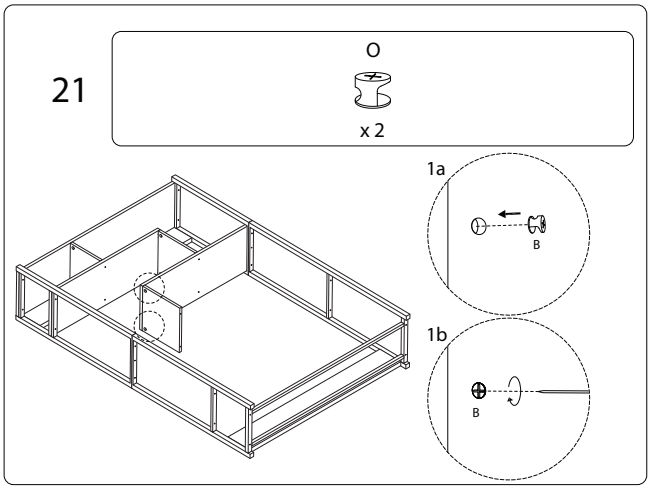


22

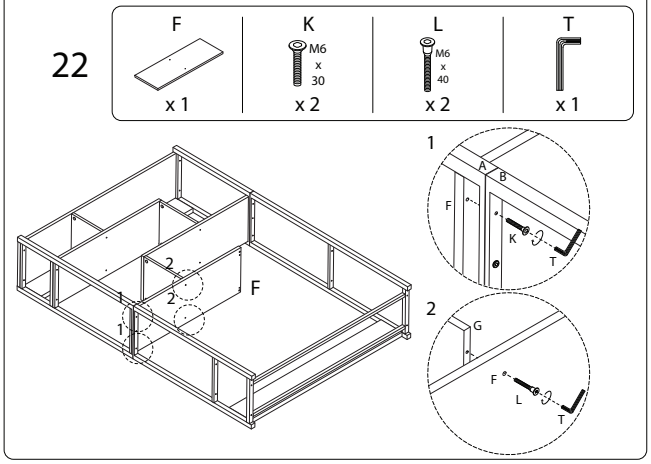

## 23

M x 2

N x 2

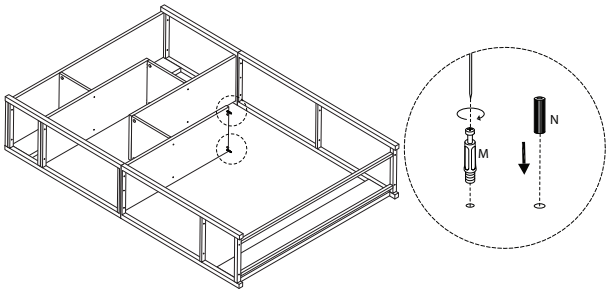


## 24

G x 1

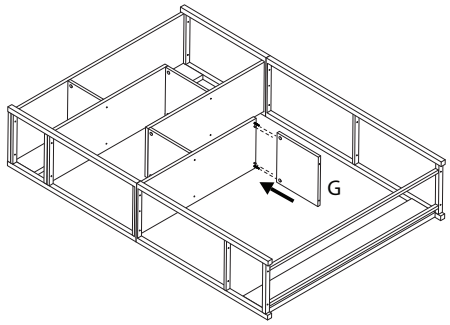






## 25

O x 2

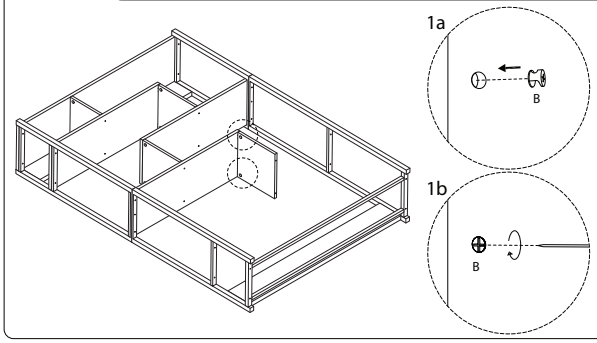


## 26

F x 1

K M6 x 30 x 2

L M6 x 40 x 2

T x 1

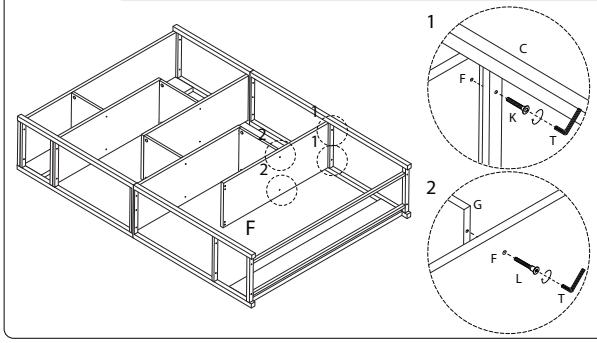






## 27

M x 2

N x 2

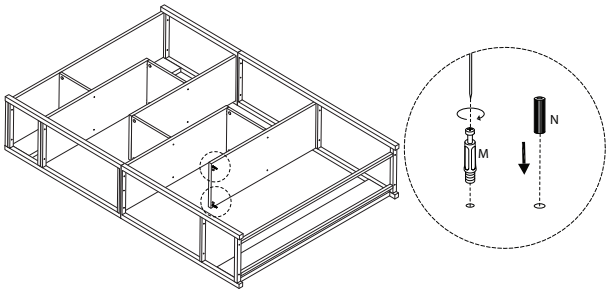


## 28

G x 1

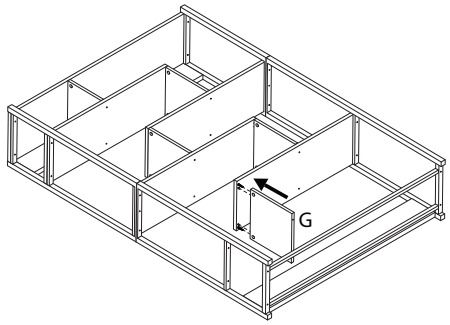






## 29

O x 2

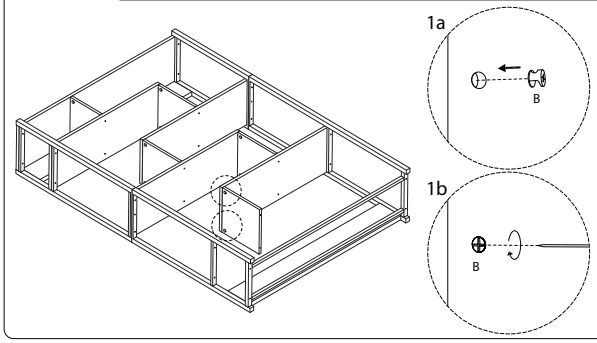


## 30

F x 1

K M6 x 30 x 2

L M6 x 40 x 2

T x 1

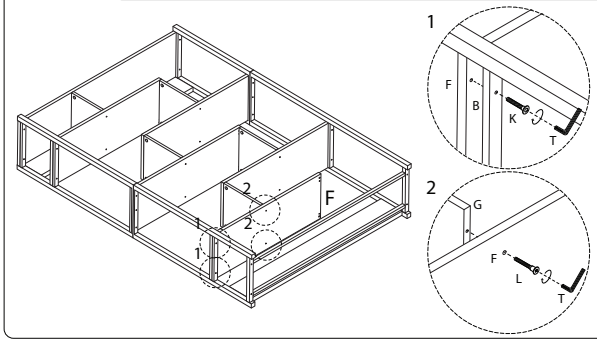

## 31

M x 2 | N x 2

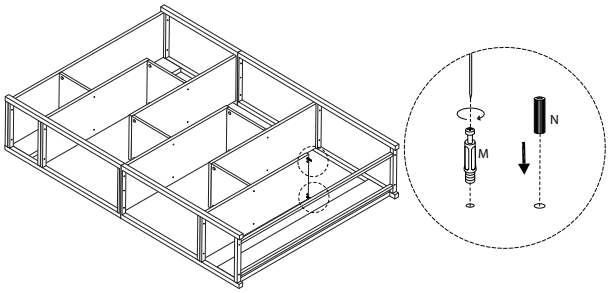


## 32

U x 1

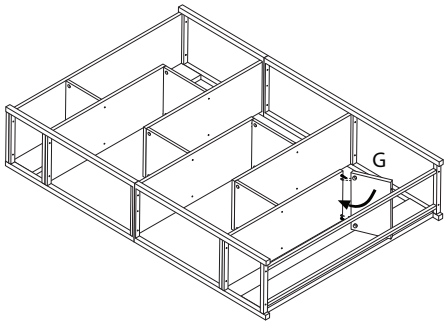






## 33

O x 2

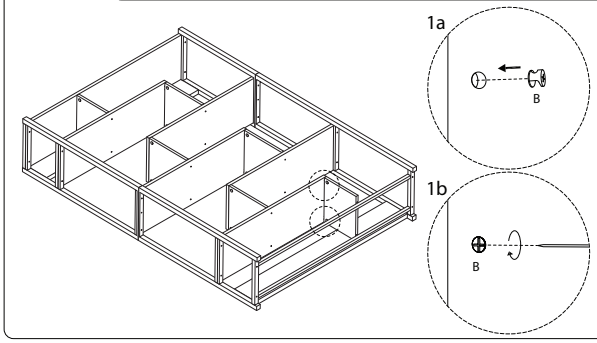


## 34

I x 1

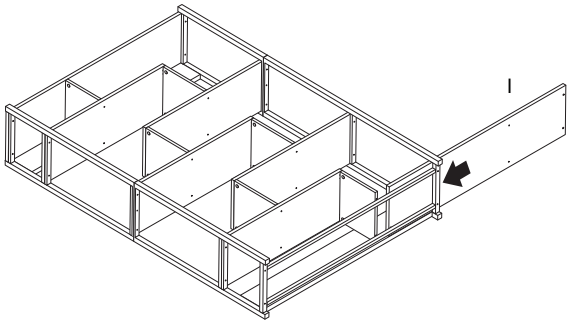






## 35

K M6 x 30 x 4 | L M6 x 40 x 2 | P M3 x 35 x 2 | T x 1

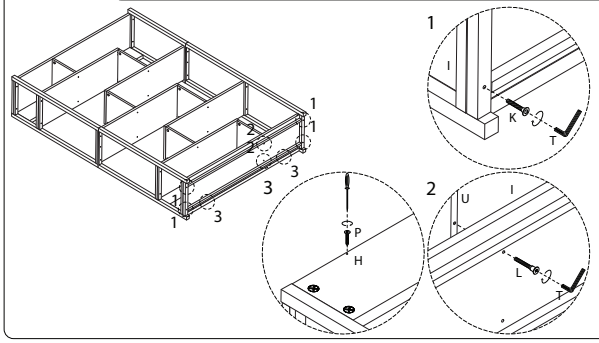


## 36

R x 1 | S x 1 | T x 1 | V M6 x 12 x 1

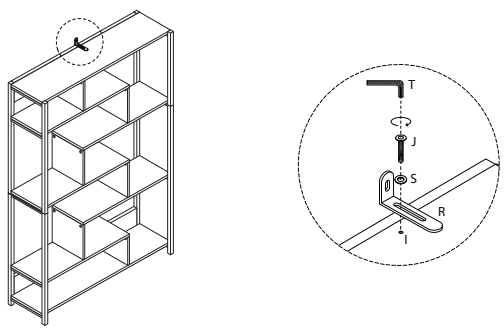






## 37

P M3 x 35 x 1 | Q x 1

