SPECIFICATION SHEET

BRAND: Muse Grey

STYLE: Table Lamp



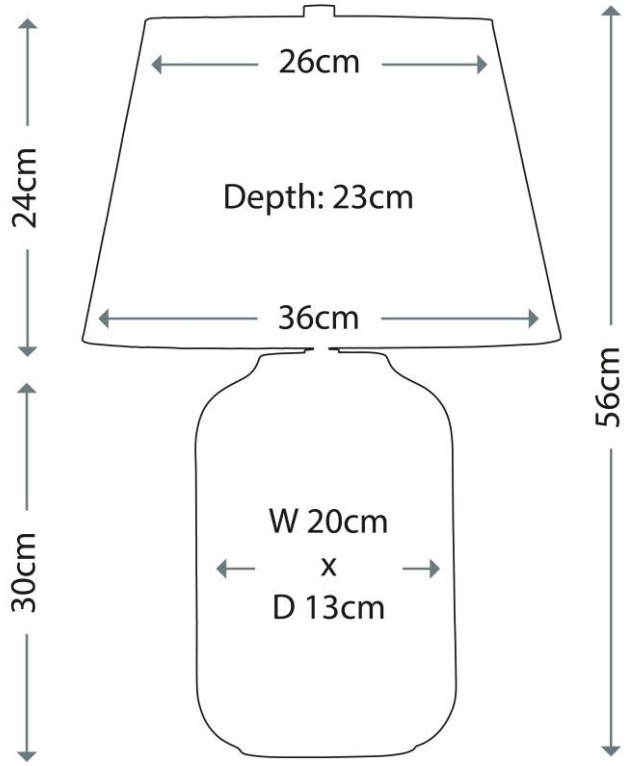

1. Item Code complete	MUSE/TL GREY	**23. Riser other details**	20mm + 5mm Caps
2. Item code base		**24. Shade width (mm)**	360
3. Item code shade	LS3022	**25. Shade height (mm)**	240
4. Tested?	No	**26. Shade depth (mm)**	230 (top ring 260 x 185)
5. Final sign-off sample done?	Yes	**27. Shade outer material**	White Faux Silk
6. Category	Indoor	**28. Shade inner material**	White Laminate Backing
7. Type	Table Lamp	**29. Finial material and finish**	Steel, Cylinder, Ø23 x 30mm, PN
8. Base material & finish	Ceramic with Grey Glaze	**30. Finial other details**	Code: 00-730105
9. Class	I	**31. Gimbal finish**	Polished Nickel
10. Voltage	230v	**32. Gimbal other details**	18mm Drop
11. Wattage	Max 60w	**33. Sharp harp material and finish**	Steel & Polished Nickel
12. Lamp Holder Type	Polished Nickel E27	**34. Shade harp other details**	8" Code: 00-730138
13. No. of lamps	I	**35. Power Cable Core, Colour & length (mm)**	3 Core Clear cable, 1700mm
14. Lamps supplied?	No	**36. Switch Type and location**	Clear Inline Switch 200mm from base
15. Dimmable?	No	**37. Plug Type and Colour**	Clear UK 3 Pin Plug
16. Overall Width/Diameter (mm)	360	**38. Earth arrangement**	3 core cable to lamp holder
17. Overall Height (mm)	560	**39. Product Weight (kg)**	2.35
18. Overall Depth (mm)	230	**40. Carton Dimensions (mm)**	Tbc
19. Base width (mm)	200	**42. Gross Weight (kg)**	Tbc
20. Base height (mm)	300	**42. Carton UK code**	00-8B1098
21. Base depth (mm)	130	**43. Notes I**	Shade Kit Code: 00-41HL025
22. Riser material and finish	Steel and Polished Nickel	**44. Notes 2**	