Specifications:

Model	FHFL1
Light source	LED
Opierating Voltage	DC10V /1.2A
Power	12W
Lumens	800lm
RA	90
Colour Temperature	2700-6500K
Operating Temperature	-10~40℃
Lifespan	50000 Hours
Switch Style	touch, tap
Special Features	Touch Dimmer, Modern Design, Memory Function, No Glare Reflects on Screen, USB Charging Port, Dimmable
Usage	For reading room, living room, bedroom, For study, relax, reading
Endless Lighting	Possibilities: Create the perfect ambience with our LED floor lamp's unique combination of 5 colour modes & 7 brightness levels

WEEE Compliance
Correct Disposal of This Product (Waste Electrical&Electronic Equipment)
(Applicable in countries with separate collection systems)
This marking on the product, accessories or literature indicates that the product and its electronic accessories should not be disposed of with other household waste at the end of their working life. To prevent possible harm to the environment or human health from uncontrolled waste disposal, please separate these items fromm other types of waste and recycle them responsibly to promote the sustainable reuse of material resources. Household users should contact either the retailer where they purchased this product, or their local government office, for details of where and how they can take these items for environmentally safe recycling. Business users should contact their supplier and check the terms and conditions of the purchase contract. This product and its electronic accessories should not be mixed with other commercial wastes for disposal.

©2021 Matrix Lighting Inc.

Matrix Lighting Ltd.
Room 1001, 10/F, Railway Plaza, 39 Chatham Road, Tsimshatsui, Kowloon, Hong Kong

Fern Howard Ltd.
1 Featherstone Rd, Wolverton Mill, Wolverton, Milton Keynes MK12 5TH
+44 (0) 1420 470400
Email: lighting@fernhoward.com

Made in Vietnam

Fern Howard
Lighting

LED FLOOR LAMP

Dimmable Touch / Eye-Protection

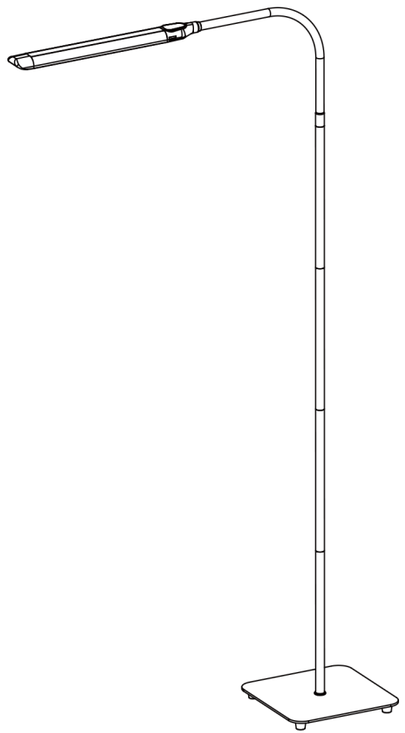

What's in the Box

1 x LED Floor Lamp
1 x Power Supply
1 x User Manual

Product Features

1. 5 Adjustable Colour Temperature
2. 7 Dimmable Settings
3. Up to Highest 800 Lm
4. Adjustable Neck
5. CRI over 90
6. USB Charger
7. Different Product Colours for Selection

Assembly and Disassembly

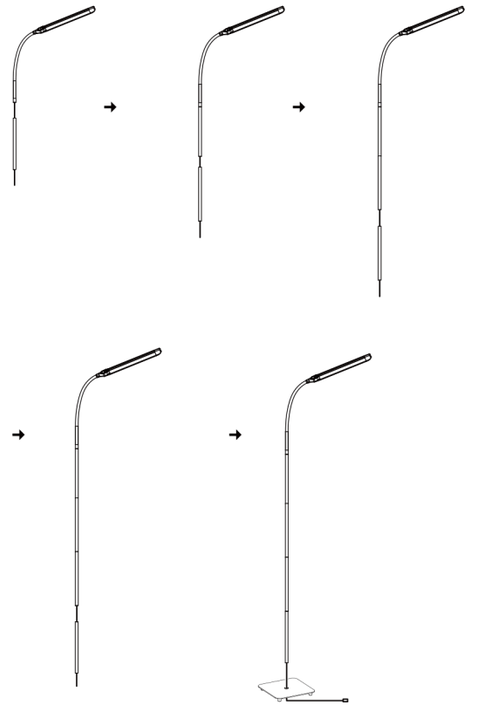

Note:
- When connecting the sections, rotate in opposite directions with both hands and do not screw with too much force.
- You can choose to use different numbers of section for different purposes and scenes. To disassemble, follow the assembly steps are above in the reverse order.

How to Use

Power On/Off
- Connect the lamp to a wall outlet using the included power adapter, tap on the Power Button to turn on the lamp.
- Press and hold the Power Button for 2 seconds to turn off the lamp.

Brightness Control
- Tap or slide across the Light Brightness Slider to adjust the light brightness.

Colour Temperature Adjustment
- Tap the Colour Temperature Button to adjust the colour temperature.

Memory Function
- Tap and hold the Power Button to turn off the lamp. It will remember the light brightness and temperature of last use when turned on again.

USB Port
- Use the USB port to charge a smartphone, tablet, e-reader or another USB charging device.

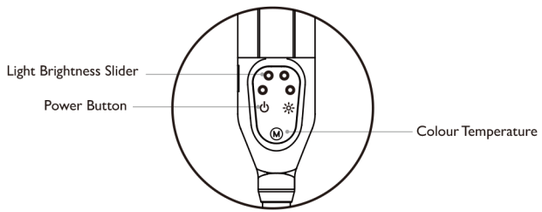

Caution

- Do not repair, disassemble, or modify under any circumstance.
- Place on flat and secure surface.
- Do not use the lamp with frayed or damaged electrical cords.
- Please keep all components of the lamp dry and clean.
- Clean with the soft and dry cloth and do not use solvents or cleaning solutions.
- Avoid any extreme heat sources or direct sunlight.
- Use the supplied AC power adapter only.
- Do not touch electrical parts with wet hands.
- Unplug the adapter when not in use.
- Never overloaded electrical circuits as it may cause electrical shock or fire.

LED DESK LAMP_Manual
SIZE: 95 X 168 mm
BLANK SIZE: 190 X 168 mm
Date: 2021.11.26
Job No.:V-034-21

FRONT

WEEE Compliance
Correct Disposal of This Product (Waste Electrical&Electronic Equipment)
(Applicable in countries with separate collection systems)
This marking on the product, accessories or literature indicates that the product and its electronic accessories should not be disposed of with other household waste at the end of their working life. To prevent possible harm to the environment or human health from uncontrolled waste disposal, please separate these items from other types of waste and recycle them responsibly to promote the sustainable reuse of material resources.
Household users should contact either the retailer where they purchased this product, or their local government office, for details of where and how they can take these items for environmentally safe recycling. Business users should contact their supplier and check the terms and conditions of the purchase contract. This product and its electronic accessories should not be mixed with other commercial wastes for disposal.

©2020 Matrix Lighting Inc.

Matrix Lighting Ltd.
Room 1001, 10/F, Railway Plaza, 39 Chatham Road, Tsimshatsui, Kowloon, Hong Kong

Fern Howard Ltd.
1 Featherstone Rd, Wolverton Mill, Wolverton, Milton Keynes MK12 5TH
+44 (0) 1420 470400
Email: lighting@fernhoward.com

Made in Vietnam

Fern Howard Lighting

LED DESK LAMP

Dimmable Touch / Eye-Protection

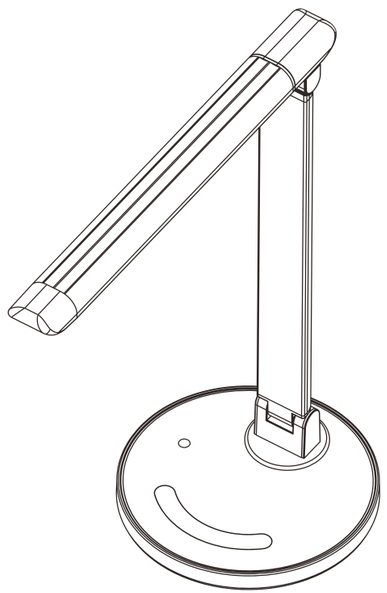

BACK

What's in the Box

1 x LED Desk Lamp
1 x Power Supply
1 x Pen Holder
1 x User Manual

Product Features

1. 5 Adjustable Colour Temperature
2. 10 Dimmable Settings
3. Up to Highest 800 Lm
4. Adjustable Arm
5. CRI over 90
6. USB Charger
7. Pen Holder Exclusive
8. Innovative Magnetic Clips Holder
9. Different Product Colours for Selection

Specifications:

Model	FHDL1
Light source	LED
Operating Voltage	DC10V /1.2A
Power	12W
Lumens	800lm
RA	90
Colour Temperature	2700-6500K
Operating Temperature	-10~40℃
Lifespan	50000Hours
Net weight	900g
Switch Style	touch, tap
Special Features	Touch Dimmer, Modern Design, Memory Function, No Glare Reflects on Screen, USB Charging Port, Dimmable
Usage	For reading room, living room, bedroom, For study, relax, reading
Endless Lighting	Possibilities: Create the perfect ambience with our LED desk lamp's unique combination of 5 colour modes & 11 brightness levels

Product Diagram

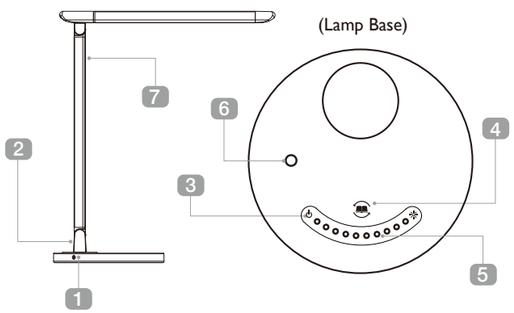

1. Power Port
2. USB Charging Port
3. Power Button
4. Colour Temperature
5. Light Brightness Slider
6. Pen Holder Base
7. Magnet Inside the Lamp Pole

How to Use

Power On/Off
- Connect the lamp to a wall outlet using the included power adapter, tap on the Power Button to turn on the lamp.
- Press and hold the Power Button for 2 seconds to turn off the lamp.

Brightness Control
- Tap or slide across the Light Brightness Slider to adjust the light brightness.

Colour Temperature Adjustment
- Tap the Colour Temperature Button to adjust the colour temperature.

Memory Function
- Tap and hold the Power Button to turn off the lamp. It will remember the light brightness and temperature of last use when turned on again.

USB Port
- Use the USB port to charge a smartphone, tablet, e-reader or another USB charging device.

Magnet Inside the Lamp Pole
- There is a magnet inside the lamp pole. This can hold a paper with paper clip.

Adjustable Angles

- Effortlessly direct the lighting to your liking.

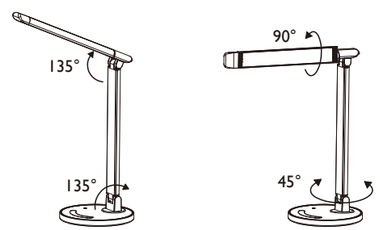

Caution

- Do not repair, disassemble, or modify under any circumstance.
- Place on flat and secure surface.
- Do not use the lamp with frayed or damaged electrical cords.
- Please keep all components of the lamp dry and clean.
- Clean with a soft and dry cloth and do not use solvents or cleaning solutions.
- Avoid any extreme heat sources or direct sunlight.
- Use the supplied AC power adapter only.
- Do not touch electrical parts with wet hands.
- Unplug the adapter when not in use.
- Never overloaded electrical circuits as it may cause electrical shock or fire.