DIMMABLE LED FLOOR LAMP

LED LAMPS

Fern Howard Lighting

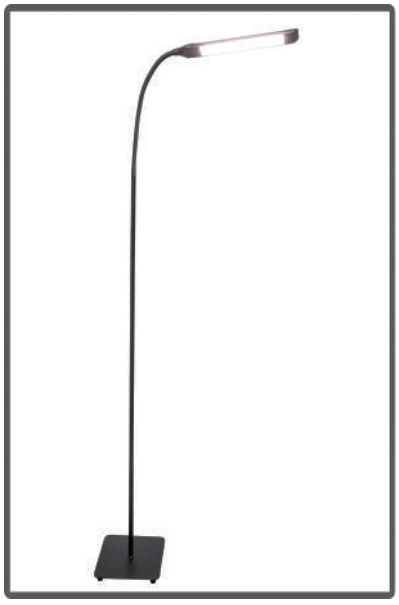







Enjoy life to the fullest with industry leading LED lighting solutions, we put users at the center of our decisions and design products that address life's needs and help you make the most of your daily activities.

USB charging point

Colour & brightness controls

Adjustable neck

Touch control

50000 Hours L70

>90 CRI (Ra)

2700 - 6500 K Colour Temperature

800 Lumens

FEATURES

- Contemporary simple style
- Extra high lumen output
- Multiple brightness levels
- 5 Colour temperatures
- With touch sensor
- Adjustable neck
- Embedded USB charging port
- 50,000 Hours of light
- Corded plug



TYPICAL APPLICATIONS

- Reading room
- Living room
- For study
- School / Dorms

SPECIFICATIONS

SPECIFICATIONS	DETAILS
MODEL	FHFL 001
LIGHT SOURCE	LED
OPERATING VOLTAGE	DC12V / 1A
POWER	12W
LUMENS	800lm
RA	90
CCT	2700K - 6500K
OPERATING TEMPERATURE	-10 ~ 40°C
LIFESPAN	50000 Hours
SWITCH STYLE	Touch, Tap
Standby energy consumption	3kWh per year
SPECIAL FEATURES	Touch Dimmer, Modern Design, Memory Function, No Glare Reflects on Screen, USB Charging Port, Dimmable

DIMMABLE LED FLOOR LAMP

PRODUCT DIAGRAM

Easy to Adjust
to get the
Perfect Lighting

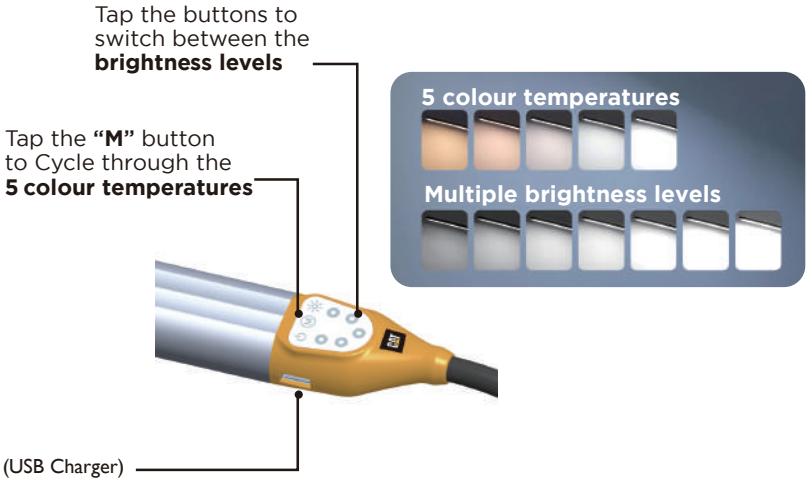

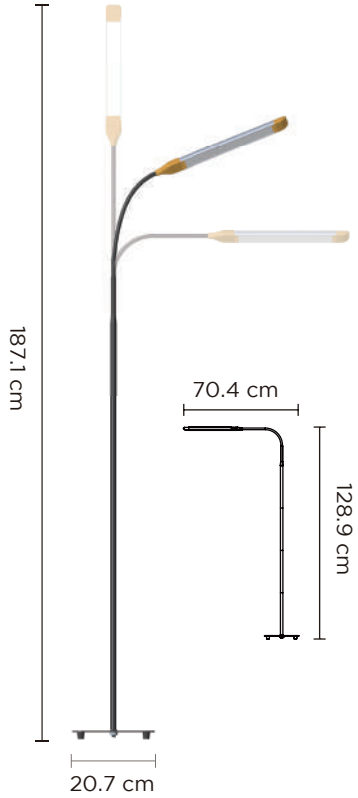

HOW TO USE

Power On/Off

- Connect the lamp to a wall outlet using the included power adapter, tap on the Power Button to turn on the lamp.
- Press and hold the Power Button for 2 seconds to turn off the lamp.

Brightness Control

- Tap or slide across the Light Brightness Slider to adjust the light brightness.

Colour Temperature Adjustment

- Tap the "M" Button to adjust the colour temperature.

Memory Function

- Tap and hold the Power Button to turn off the lamp. It will remember the light brightness and temperature of last use when turned on again.

USB Port

- Use the USB port to charge a smartphone, table, e-reader or another USB charging device.

STANDARDS

LED EN 60598 RoHS CE UK CA

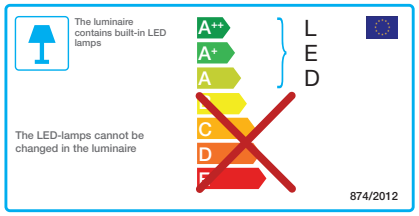

ORDERING GUIDE

Standard Product Code		Performance Data	
	Description	Lumen Output (lm)	Wattage (W)
DIMMABLE LED FLOOR LAMP			
FHFL1	FLOOR LAMP LED12W 800LM 2700K-6500K	800	12

Luminaires are manufactured and tested in accordance with BS EN60598. Incorporated control gear and components comply with BS/VDE standards. Luminaires are tested in accordance with IES LM-79-08.

Fern-Howard Ltd, 1 Featherstone Rd, Wolverton Mill, Wolverton, Milton Keynes MK12 5TH. Call +44 (0)1420 470 400 or email lighting@fernhoward.com

Registered in England Reg. No. 3202749. We reserve the right to alter specifications without notice in accordance with our policy of continuous product improvement. Design and copyright reserved and our standard Term & Conditions apply. Full details of our warranty can be found on our website.

DIMMABLE LED DESK LAMP

LED LAMPS

Fern Howard Lighting



Create the perfect ambience with our LED desk lamp's unique combination of 5 colour modes & 10 brightness levels.

USB charging point

Colour & brightness controls

Adjustable arm

Touch control

50000 Hours L70

>90 CRI (Ra)

2700 - 6500 K Colour Temperature

800 Lumens

FEATURES

- Contemporary simple style
- Extra high lumen output
- 10 levels of brightness
- 5 Colour temperatures
- With touch sensor
- Adjustable arm
- Embedded USB charging port
- Free pen holder and paper clip
- 50,000 Hours of light
- Corded plug



TYPICAL APPLICATIONS

- Reading room
- Living room
- Bedroom
- For study
- School / Dorms

SPECIFICATIONS

SPECIFICATIONS	DETAILS
MODEL	FHDL 001
LIGHT SOURCE	LED
OPERATING VOLTAGE	DC10V / 1.2A
POWER	12W
LUMENS	800lm
RA	90
CCT	2700K - 6500K
OPERATING TEMPERATURE	-10 ~ 40°C
LIFESPAN	50000 Hours
NET WEIGHT	900g
SWITCH STYLE	Touch, Tap
Standby energy consumption	3kWh per year
SPECIAL FEATURES	Touch Dimmer, Modern Design, Memory Function, No Glare Reflects on Screen, USB Charging Port, Dimmable.

DIMMABLE LED DESK LAMP

PRODUCT DIAGRAM

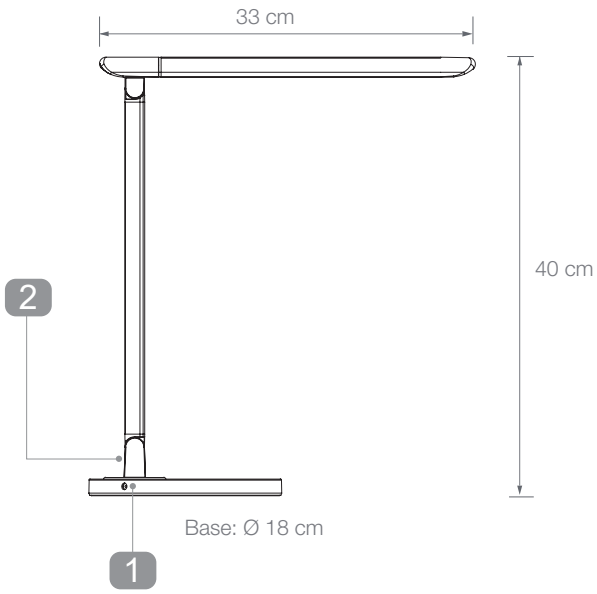

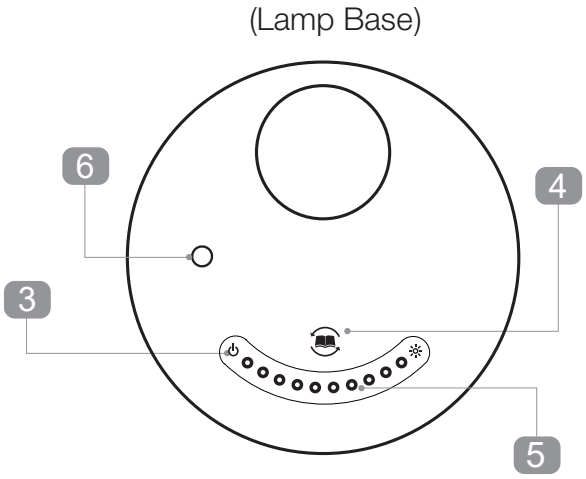

1. Power Port
2. USB Charging Port
3. Power Button
4. Colour Temperature
5. Light Brightness Slider
6. Pen Holder Base

HOW TO USE

Power On/Off

- Connect the lamp to a wall outlet using the included power adapter, tap on the Power Button to turn on the lamp.
- Press and hold the Power Button for 2 seconds to turn off the lamp.

Brightness Control

- Tap or slide across the Light Brightness Slider to adjust the light brightness.

Colour Temperature Adjustment

- Tap the Colour Temperature Button to adjust the colour temperature.

Memory Function

- Tap and hold the Power Button to turn off the lamp. It will remember the light brightness and temperature of last use when turned on again.

USB Port

- Use the USB port to charge a smartphone, table, e-reader or another USB charging device.

STANDARDS

LED EN 60598 RoHS CE UK CA

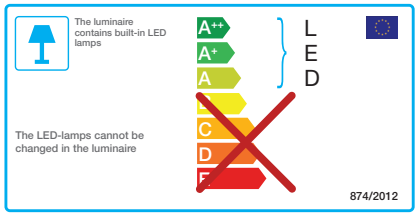

ORDERING GUIDE

Standard Product Code		Performance Data	
	Description	Lumen Output (lm)	Wattage (W)
DIMMABLE LED DESK LAMP			
FHDL1	DESK LAMP LED 12W 800LM 2700K-6500K	800	12

Luminaires are manufactured and tested in accordance with BS EN60598. Incorporated control gear and components comply with BS/VDE standards. Luminaires are tested in accordance with IES LM-79-08.

Fern-Howard Ltd, 1 Featherstone Rd, Wolverton Mill, Wolverton, Milton Keynes MK12 5TH. Call +44 (0)1420 470 400 or email lighting@fernhoward.com

Registered in England Reg. No. 3202749. We reserve the right to alter specifications without notice in accordance with our policy of continuous product improvement. Design and copyright reserved and our standard Term & Conditions apply. Full details of our warranty can be found on our website.