Long Life Lamp Company

Product Data Sheet

Supplier's Name: Long Life Lamp Company
Supplier's Address: T2 Arundel Rd Uxbridge UB8 2RP UK
Production Description: Vintage Retro Industrial Metal Ceiling Pendant Light
Model No.: H3055

• General Information

Recommended Bulbs:
Energy Rating from A-G

IP20

Cap-type (or other electric interface)	**E27**
Mains or non-mains	**Mains (240V 50Hz AC)**
Energy consumption in on-mode	**Max 60 kWh/1000h**
On-mode power	**Max 60 W**
Outer dimensions	**255mm x 255mm x 1200mm**

5 055875 579859

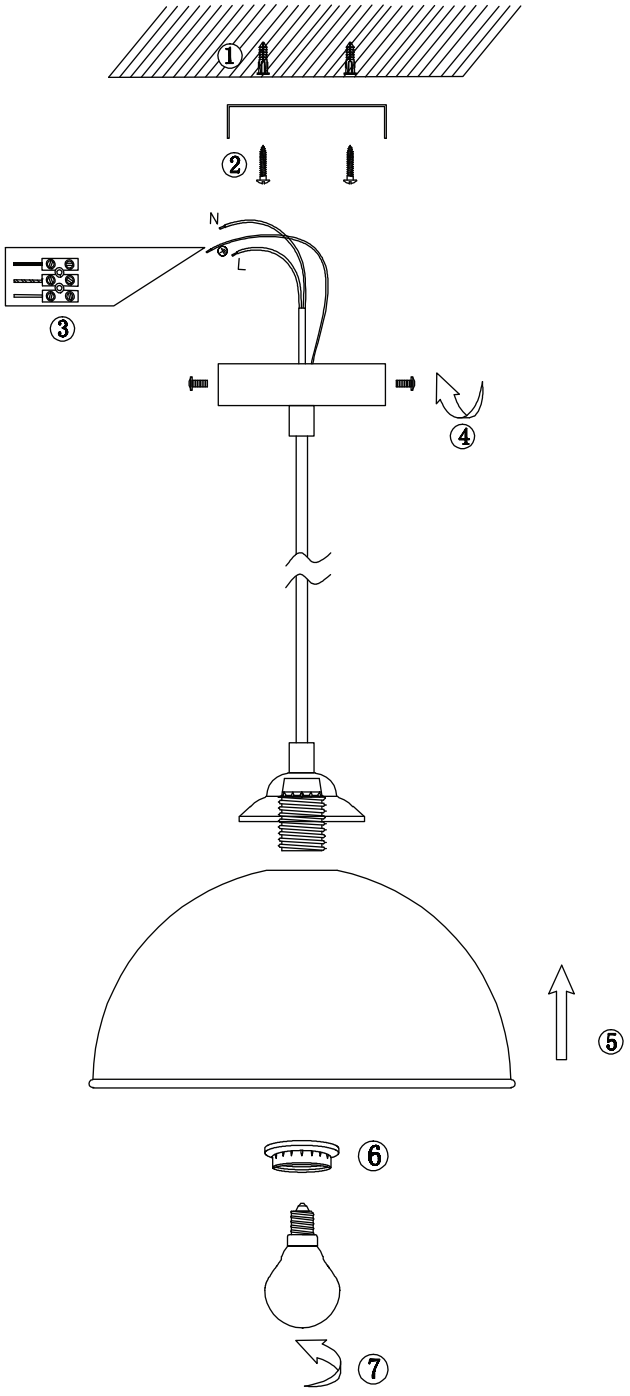

Type Y

To ensure your safety, If the cable becomes damaged, it must be replaced only by a suitably qualfied person. If used incorrectly this product can be dangerous. Young people should be given instruction or supervised to ensure it is used safely.

Please note: For Indoor Use ONLY!

Always disconnect from mains and alow to cool before changing bulb, cleaning or moving.

