2501014

Please read all instructions carefully before use and retain for future reference.

Veuillez lire attentivement ces instructions avant utilisation et conservez-les pour pouvoir les consulter à l'avenir.

Bitte lesen Sie die Anleitung sorgfältig und bewahren Sie sie als Referenz auf.

Leed todas las instrucciones detenidamente antes de usar y retened para futuras consultas.

Si prega di leggere attentamente tutte le istruzioni prima dell'uso e conservarle per una futura consultazione.

ATTENTION This appliance has a thermal cut out switch. The thermal cut out will activate and shut down the appliance should the appliance overheat.

Unplug from the mains and or battery and allow to cool for 30 minutes before re-use.

ATTENTION Cet appareil dispose d'un interrupteur d'arrêt thermique. L'arrêt thermique s'activera et éteindra l'appareil si l'appareil commençait à surchauffer.

Débranchez la prise, ou la batterie, et laissez refroidir pendant 30 minutes avant de réutiliser.

VORSICHT Dieses Gerät hat einen thermischen Ausschalter. Der thermische Ausschalter wird aktiviert und schaltet das Gerät aus, wenn das Gerät überhitzt.

Ziehen Sie den Stecker aus der Steckdose und/oder entfernen Sie den Akku und lassen Sie das Gerät 30 Minuten abkühlen, bevor Sie es erneut benutzen.

ATENCIÓN Este aparato tiene un interruptor de corte térmico. El corte térmico se activará y apagará el dispositivo si el aparato se sobrecalienta.

Desenchufe de la red y / o la batería y déjelo enfriar durante 30 minutos antes de volver a usarlo.

ATTENZIONE Questo apparecchio è dotato di un interruttore di protezione termica che accende e spegne l'apparecchio in caso di surriscaldamento.

Scollegare dalla rete elettrica e o la batteria e lasciar raffreddare per 30 minuti prima di un nuovo utilizzo.

CAUTION Do not immerse in water.
ATTENTION Ne pas immerger dans l'eau.
VORSICHT Nicht in Wasser tauchen.
PRECAUCIÓN No sumergid en agua.
AVVERTENZA Non immergere nell'acqua.

Do not cover.
Ne pas couvrir.
Nicht abdecken.
No cubrir.
Non coprire.

CAUTION hot surfaces
ATTENTION Surfaces chaudes
VORSICHT heiße Oberflächen
PRECAUCIÓN superficies calientes
AVVERTENZA Superfici calde

Materials approved for food use.
Matériaux approuvés pour un usage alimentaire.
Materialien sind für Lebensmittel zugelassen.
Materiales aprobados para uso alimentario.
Materiali approvati per uso alimentare.

Scan me
For a quick guide to Air Fryer Recipes

VonShef

EN

Please read all instructions carefully before use and retain for future reference.

INTENDED USE Only operate the appliance for its intended purpose and within the parameters specified in this manual.
This appliance is for domestic use only. Do not use outdoors or on wet surfaces.
This appliance is not intended for use by persons with reduced physical, sensory or mental capabilities, or lack of experience and knowledge, unless supervised or given appropriate instruction concerning the product's use by a person responsible for their safety.
The appliance is not intended to be operated by means of an external timer or separate remote-control system.

GENERAL SAFETY Do not allow to be used as a toy. Children should be supervised to ensure they do not play with the appliance.
If the appliance is not functioning properly, has been dropped, damaged, left outdoors, or immersed in liquid, do not use, contact DOMU Brands Customer Services.
Do not use the appliance if any parts appear to be faulty, missing or damaged.
Ensure all parts are securely attached as instructed by this instruction manual before use.

CABLES AND PLUGS Check to ensure your electricity supply matches that shown on the rating plate. This product should only be used as rated. Preferably, the socket outlet should be protected by a Residual Current Device RCD (UK/EU) Ground Fault Indicator (US).
Do not use with a damaged cable or plug. If the supply cable is damaged, it must be replaced by a qualified engineer or authorised service agent in order to avoid a hazard. The use of an extension cable is not recommended.
Do not handle the plug or appliance with wet hands.
Keep the cable away from heated surfaces.
Do not let the cable hang over the edge of the table or countertop where it could be pulled on inadvertently by children or pets.
Do not pull the cable around sharp edges or corners.
Do not leave unattended when plugged in. Unplug from outlet when not in use.
Turn off all controls before unplugging.
Do not unplug by pulling on the cable. To unplug, grasp the plug, not the cable.
Always unplug before performing user maintenance, connecting or disconnecting attachments, or changing accessories.
Ensure the cable is stored safely to prevent hazards.

RISK OF PERSONAL INJURY Always locate your appliance away from the edge of the worktop, on a firm, flat, heat-resistant surface with sufficient space around all sides.
Do not insert any objects into openings or cover the appliance.
Do not place any cardboard, plastics or paper inside or on the appliance unless stated in the instructions.
Do not use the appliance near any combustible surfaces.
Only use suitable cookware where applicable.
Do not use outdoors or near heat sources.
Take care not to touch any surfaces that may get hot when in use.
Take care not to touch any surfaces that may remain hot for a period of time after use.
Never operate the appliance when empty.
Do not overload/overfill the appliance.
When using for the first time your appliance may give off a 'new' smell or vapour. This will dissipate after a few uses.
Do not lift or move the appliance whilst in use.
Do not operate continuously for periods longer than those marked on the product or indicated in the instructions.
Ensure the appliance is switched off and unplugged before changing accessories or cleaning.
Use only as described in this manual and with DOMU Brands recommended attachments only.

CLEANING & MAINTENANCE Never soak or immerse electrical or heating components and or a component that has a plug attached.
Hand washing recommended; soak in warm soapy water and wipe down using a soft sponge. To remove stubborn stains, use a non abrasive cleaning brush.
Do not use abrasive, harsh cleaning solutions or metal scouring pads.
Never wash any electrical or heating components and or a component that has a plug attached in a dishwasher.

TECHNICAL SPECIFICATION

Rated Voltage 220-240V
Rated Power 1470W
Rated Frequency 50-60Hz

FR

Veuillez lire attentivement ces instructions avant utilisation et conservez-les pour pouvoir les consulter à l'avenir.

UTILISATION PRÉVUE
Utilisez l'appareil uniquement pour son usage prévu et conformément aux paramètres précisés dans ce manuel.
Cet appareil est réservé à un usage domestique. Ne l'utilisez pas en extérieur ni sur des surfaces humides.
Cet appareil n'a pas été conçu pour être utilisé par des personnes souffrant de capacités physiques, sensorielles ou mentales réduites, non plus que par celles qui manquent de connaissances et d'expérience, à moins qu'une personne responsable de leur sécurité ne les supervise ou ne leur ait donné les instructions appropriées à propos de l'utilisation du produit.
L'appareil n'est pas fait pour être utilisé à l'aide d'une minuterie externe ou d'un système de commande à distance distinct.

CONSIGNES GÉNÉRALES DE SÉCURITÉ N'autorisez jamais qu'il soit utilisé comme un jouet. Les enfants devraient toujours être supervisés afin de s'assurer qu'ils ne jouent pas avec l'appareil.
Si l'appareil ne fonctionne pas correctement, qu'il est tombé, qu'il a été endommagé, laissé en extérieur ou immergé dans du liquide, ne l'utilisez pas et contactez les Services à la clientèle de DOMU Brands.
N'utilisez pas l'appareil si des pièces ont l'air défectueuses, manquantes ou endommagées.
Avant utilisation, vérifiez que toutes les pièces sont bien attachées, comme indiqué dans le mode d'emploi.

FILS ET PRISES Assurez-vous que votre alimentation électrique correspond aux valeurs affichées sur la plaque signalétique. Ce produit doit seulement être utilisé conformément à cette puissance nominale. La prise de courant devrait, de préférence, être protégée par un dispositif différentiel à courant résiduel (DDR) ou un Indicateur de défaut de prise à la terre.

En cas de dégât sur un câble ou une fiche, ne l'utilisez pas. Si le câble d'alimentation est endommagé, il doit, pour éviter tout danger, être remplacé par un ingénieur qualifié ou un prestataire de service autorisé. L'utilisation d'une rallonge n'est pas recommandée.
Ne maniez ni la fiche ni l'appareil avec des mains mouillées.
Conservez les câbles loin des surfaces chauffées.
Ne laissez pas le câble pendre au bord de la table ou du plan de travail. Les enfants ou les animaux de compagnie pourraient tirer dessus par inadvertance,
Ne tirez pas le câble sur des bords ou des coins coupants.
Ne laissez jamais sans surveillance lorsqu'il est branché.
Débranchez de la prise lorsque vous ne l'utilisez pas.
Désactivez toutes les commandes avant de débrancher.
Ne débranchez jamais en tirant sur le câble. Pour débrancher, attrapez la fiche et non le fil.
Débranchez toujours avant de réaliser l'entretien, de connecter ou déconnecter des accessoires ou de changer d'accessoire.
Afin d'éviter tout risque, vérifiez que le câble est entreposé en toute sécurité.

RISQUES DE BLESSURES Placez toujours votre appareil loin des bords du plan de travail, sur une surface ferme, plate et résistante à la chaleur, avec suffisamment d'espace sur les côtés.
N'insérez pas d'objets dans les ouvertures et ne couvrez pas l'appareil.
Ne placez pas de carton, de plastique ou de papier à l'intérieur de l'appareil, sauf si indiqué différemment dans les instructions.
N'utilisez pas l'appareil près des surfaces combustibles.
Utilisez uniquement, lorsque applicable, les ustensiles de cuisine adaptés.
Ne l'utilisez pas en extérieur ni près de sources de chaleur.
Attention à ne toucher aucune surface qui pourrait chauffer en cours d'utilisation.
Attention à ne toucher aucune surface qui pourrait rester chaude pendant un moment après utilisation.
Ne faites jamais fonctionner l'appareil à vide.
Ne surchargez pas et ne remplissez pas trop l'appareil.
Lorsque vous l'utilisez pour la première fois, votre appareil pourrait émettre une odeur de neuf ou un peu de vapeur. Ceci disparaîtra après quelques utilisations.
Ne soulevez pas et ne déplacez pas l'appareil lorsqu'il fonctionne.
Ne faites pas fonctionner en permanence, pendant des périodes de temps plus longues que celles affichées sur le produit ou indiquées dans les instructions.
Vérifiez que l'appareil est éteint et débranché avant de changer les accessoires ou de le nettoyer.
N'utilisez que comme décrit dans ce manuel et uniquement avec les pièces recommandées par DOMU Brands.

NETTOYAGE ET ENTRETIEN Ne plongez et n'immergez jamais des composants électriques ou chauffant, non plus qu'un composant attaché à une prise.
Le lavage à la main est recommandé ; trempez dans de l'eau chaude et savonneuse, puis essuyez avec une éponge douce. Pour retirer les tâches tenaces, utilisez une brosse non abrasive. N'utilisez pas de solutions de nettoyage abrasives ou acides, non plus que des tampons à récurer métalliques.
Ne lavez jamais au lave-vaisselle des composants électriques ou chauffants, non plus qu'un composant attaché à une prise.

CARACTÉRISTIQUES TECHNIQUES

Tension nominale 220-240V
Puissance nominale 1470W
Fréquence nominale 50-60Hz

DE

Bitte lesen Sie die Anleitung sorgfältig und bewahren Sie sie als Referenz auf.

NUTZUNGSZWECK
Verwenden Sie das Gerät nur für den vorgesehenen Zweck und innerhalb der in diesem Handbuch angegebenen Parameter.
Dieses Gerät ist nur für den Hausgebrauch gedacht.
Verwenden Sie es nicht im Freien oder auf nassen Oberflächen.
Dieses Produkt darf nicht von Personen (auch Kindern) mit eingeschränkten physischen, sensorischen oder mentalen Fähigkeiten oder einem Mangel an Erfahrung und Wissen bedient werden, es sei denn sie wird von einer für Ihre Sicherheit verantwortlichen Person, beaufsichtigt oder zur richtigen Nutzung angeleitet.
Das Gerät darf nicht mit einem externen Timer oder einer separaten Fernbedienung verwendet werden.

ALLGEMEINE VORSICHTSMASSNAHMEN
Dieses Produkt darf nicht als Spielzeug genutzt werden. Kinder sollten beaufsichtigt werden. Stellen Sie sicher, dass Kinder nicht mit dem Gerät spielen.
Wenn das Gerät nicht richtig funktioniert, heruntergefallen oder beschädigt ist, im Freien liegen geblieben ist oder in Flüssigkeit getaucht wurde nutzen Sie es nicht. Kontaktieren Sie in diesem Fall den DOMU Brands Kundendienst.
Nutzen Sie das Gerät nicht, wenn Teile fehlerhaft scheinen, wenn Teile fehlen oder beschädigt sind.
Stellen Sie vor dem Gebrauch sicher, dass alle Teile wie in dieser Bedienungsanleitung beschrieben ordnungsgemäß befestigt sind.

KABEL UND STECKER
Prüfen Sie, ob Ihr Stromnetz zu den auf dem Typenschild genannten Spannungen passt. Dieses Produkt sollte nur mit den dort genannten Netzspannungen verwendet werden. Vorzugsweise sollte die Steckdose durch eine Fehlerstrom-Schutzeinrichtung RCD (UK / EU), Erdschlussanzeige (US) geschützt werden.
Verwenden Sie das Gerät nicht mit beschädigtem Kabel oder Stecker. Wenn das Stromkabel beschädigt ist, muss es von einem qualifizierten Techniker oder Kundendienstmitarbeiter ausgetauscht werden, um Gefahren zu vermeiden. Die Verwendung eines Verlängerungskabels wird nicht empfohlen.
Bedienen Sie das Gerät oder den Stecker nicht mit nassen Händen.
Halten Sie das Kabel fern von erhitzten Oberflächen.
Lassen Sie das Kabel nicht über den Tischrand oder die Arbeitsfläche hängen, damit das Gerät nicht von Kindern oder Haustieren heruntergezogen werden kann.
Führen Sie das Kabel nicht um scharfe Ecken oder Kanten herum.
Lassen Sie das eingesteckte Gerät nicht unbeaufsichtigt. Ziehen Sie den Stecker, wenn Sie das Gerät nicht verwenden.
Schalten Sie das Gerät vor dem Ausstecken aus.
Stecken Sie das Gerät nicht aus, indem Sie am Kabel ziehen. Um das Gerät auszustecken ziehen Sie bitte am Stecker, nicht am Kabel.
Ziehen Sie immer den Stecker, bevor Sie das Gerät warten, Aufsätze anbringen oder entfernen oder bevor Sie das Zubehör wechseln.
Achten Sie darauf, dass das Kabel sicher verstaut wird, um Gefahren zu vermeiden.

VERLETZUNGSGEFAHR
Stellen Sie Ihr Gerät niemals zu nahe an den Rand der Arbeitsfläche. Stellen Sie es auf eine stabile, flache, hitzeresistente Oberfläche mit ausreichend Platz auf

allen Seiten. Stecken Sie nichts in Öffnungen, decken Sie das Gerät nicht ab.
Legen Sie keine Pappe, kein Plastik oder Papier in oder auf das Gerät, es sei denn, dies wird in der Anleitung erlaubt.Verwenden Sie das Gerät nicht in der Nähe von brennbaren Oberflächen.
Verwenden Sie nur geeignetes Kochgeschirr, falls zutreffend. Verwenden Sie das Gerät nicht im Freien oder in der Nähe von Wärmequellen.
Achten Sie darauf, keine Oberflächen zu berühren, die bei der Benutzung heiß werden könnten.
Achten Sie darauf, keine Oberflächen zu berühren, die nach Gebrauch längere Zeit heiß bleiben könnten.
Lassen Sie das Gerät niemals laufen, wenn es leer ist.
Überladen / Überfüllen Sie das Gerät nicht.
Wenn Sie das Gerät zum ersten Mal verwenden, kann es riechen oder dampfen. Dies verschwindet nach wenigen Anwendungen.
Heben Sie das Gerät nicht an, wenn es verwendet ist. Bewegen Sie es während des Betriebs nicht.
Verwenden Sie das Gerät nicht länger durchgehend, wie in dieser Anleitung oder auf dem Gerät selbst angegeben.
Stellen Sie sicher, dass das Gerät ausgeschaltet und ausgesteckt ist, bevor Sie Zubehör wechseln oder reinigen.
Verwenden Sie es nur so, wie in dieser Anleitung beschrieben und nur zusammen mit den von DOMU Brands empfohlenen Zubehörteilen.

REINIGUNG & PFLEGE
Tauchen Sie elektrische Komponenten und oder eine Komponente, die einen Stecker hat, niemals in Flüssigkeiten ein.
Spülen Sie das Produkt von Hand mit warmem Wasser und einem milden Spülmittel. Verwenden Sie einen weichen Schwamm. Verwenden Sie zum Entfernen von hartnäckigen Flecken eine nicht scheuernde Reinigungsbürste. Verwenden Sie keine scheuernden, scharfen Reinigungslösungen oder Metallscheuerschwämme.
Geben Sie elektrische Komponenten und oder eine Komponente, die einen Stecker hat, niemals in eine Geschirrspülmaschine.

TECHNISCHE SPEZIFIKATION

Nennspannung 220-240V
Nennleistung 1470W
Nennfrequenz 50-60HZ

ES

Por favor, leed cuidadosamente las instrucciones antes del uso y conservadlas para futuras consultas.

USO PREVISTO
Utilizad el artefacto sólo para su propósito previsto y dentro de los parámetros especificados en este manual.
Este artefacto es sólo para uso doméstico. No lo utilicéis fuera de casa o sobre superficies mojadas.
Este artefacto no está destinado a ser usado por personas con reducidas capacidades físicas, sensoriales o mentales, o falta de experiencia y conocimiento, a menos que sea bajo supervisión o bajo la apropiada instrucción sobre el uso del producto por una persona responsable de su seguridad.
El artefacto no está diseñado para ser operado por medio de un temporizador externo o un sistema de control remoto separado.

SEGURIDAD GENERAL
No permitáis que sea usado como un juguete. Los niños deben ser supervisados para asegurarse de que no jueguen con el artefacto.
Si el artefacto no funciona correctamente, se ha caído, dañado, dejado afuera o ha sido inmerso en líquido, no lo uséis, comunicaos con el Servicio al Cliente de DOMU Brands.
No uséis el artefacto si alguna de las piezas parece estar defectuosa, falta o está dañada.
Aseguraos de que todas las piezas están firmemente unidas como es indicado en este manual antes de su uso.

CABLES Y ENCHUFES
Verificad para aseguraros de que vuestro suministro de electricidad coincide con el que se muestra en la placa de características. Este producto sólo debe usarse según la clasificación. Preferiblemente, la toma de corriente debe estar protegida por un Indicador de falla a tierra (US) del Dispositivo de Corriente Residual RCD (UK/EU).
No lo utilicéis con un cable o enchufe dañado. Si el cable de suministro está dañado, debe ser reemplazado por un ingeniero calificado o un agente de servicio autorizado para evitar riesgos. El uso de un cable de extensión no es recomendable.
No manipuléis el enchufe o el artefacto con las manos mojadas.
Mantened el cable alejado de superficies calientes.
No permitáis que el cable cuelgue de los bordes de la mesa o encimera donde podría ser halado inadvertidamente por niños o mascotas.
No tiréis del cable alrededor de bordes afilados o esquinas.
No lo dejéis desatendido cuando esté enchufado. Desenchufadlo cuando no esté en uso.
Apagad todos los controles antes de desconectar.
No desenchuféis halando del cable. Para desenchufar, agarrad el enchufe, no el cable.
Siempre desenchufad antes de realizar mantenimiento, conectar, desconectar o cambiar accesorios.
Aseguraos de que el cable está almacenado de forma segura para evitar riesgos.

RIESGO DE LESIONES PERSONALES.
Colocad siempre vuestro artefacto lejos de los bordes de la encimera, sobre una superficie firme, plana y resistente al calor con suficiente espacio a los lados.
Manipulad siempre las cuchillas /objetos afilados con cuidado.
El artefacto no está no está destinado a ser utilizado por medio de un temporizador externo o un sistema separado de control remoto.
No pongáis cartulinas, plástico o papel dentro o sobre el artefacto a menos que se indique en las instrucciones.
No utilicéis el artefacto cerca de superficies combustibles.
Sólo utilizad utensilios de cocina adecuados cuando corresponda.
No lo utilicéis fuera de casa o cerca de fuentes de calor.
Tened cuidado de no tocar ninguna superficie que pueda calentarse cuando esté en uso.
Tened cuidado de no tocar ninguna superficie que pueda permanecer caliente por un periodo de tiempo luego del uso.
Nunca operéis el artefacto cuando este vacío.
No sobrecarguéis/sobrellenéis el artefacto.
Cuando estéis usando el artefacto por primera vez, puede emitir un "nuevo" olor o vapor. Esto se disipará luego de un poco de uso.
No levantéis o mováis el artefacto mientras esté en funcionamiento.
No lo uséis continuamente por periodos más largos que los marcados en el producto o indicados en las instrucciones.
Aseguraos de que el artefacto esté apagado y desenchufado antes de cambiar los accesorios o limpiarlo.
Usadlo sólo como es descrito en este manual y con los

accesorios recomendados por DOMU Brands.

LIMPIEZA Y MANTENIMIENTO
Nunca sumerjáis componentes eléctricos o calientes y / o componentes que tengan un enchufe.
Lavado a mano recomendado; remojad en agua tibia y jabonosa y limpiad utilizando una esponja suave. Para remover manchas difíciles, usad un cepillo de limpieza no abrasivo. No utilicéis productos de limpieza abrasivos o duros o esponjas de alambre.
Nunca lavéis ningún componente eléctrico o caliente y / o un componente que tenga enchufe en el lavaplatos.

ESPECIFICACIÓN TÉCNICA

Tensión nominal 220-240V Potencia nominal 1470W
Frecuencia nominal 50-60Hz

IT

Si prega di leggere attentamente tutte le istruzioni prima dell'uso e conservarle per una futura consultazione.

USO PREVISTO
Utilizzare l'apparecchio solo per il suo scopo previsto e secondo i parametri indicati nel presente manuale.
Questo apparecchio è solo per uso domestico. Non utilizzare all'esterno o su superfici bagnate.
Questo apparecchio non è destinato all'utilizzo da parte di soggetti con ridotte capacità fisiche, sensoriali o mentali, oppure senza esperienza, tranne nel caso in cui abbiano avuto la supervisione o istruzioni, relative all'utilizzo del prodotto, da parte di un soggetto responsabile della loro sicurezza.
L'apparecchio non può essere azionato attraverso un timer esterno o tramite un sistema di controllo da remoto separato.

SICUREZZA GENERALE
Non consentirne l'utilizzo come giocattolo. I bambini devono essere supervisionati per garantire che non utilizzino l'apparecchio per giocare.
Qualora l 'apparecchio non dovesse funzionare in maniera adeguata, sia caduto, danneggiato, lasciato all'esterno oppure immerso in sostanze liquide, non utilizzare, contattare il Servizio clienti di DOMU Brands.
Non utilizzare l'apparecchio nel caso in cui una qualsiasi parte dovesse sembrare difettosa, mancante o danneggiata.Prima dell'uso, accertarsi che tutte le parti siano fissate bene come indicato nel presente manuale delle istruzioni.

CAVI E PRESE
Assicurarsi che il voltaggio indicato sulla targhetta dell'apparecchio corrisponda a quella della propria rete elettrica. Questo apparecchio può essere utilizzato solo come indicato. La presa di corrente dovrebbe essere preferibilmente protetta da un Dispositivo per corrente residua (RCD), Ground Fault Indicator (USA).
Non utilizzare con cavo o presa danneggiati. Qualora il cavo di alimentazione dovesse essere danneggiato, deve essere sostituito da un ingegnere qualificato, al fine di evitare pericoli. Non si consiglia l'utilizzo di una prolunga.
Non manovrare la presa o l'apparecchio con le mani bagnate.
Tenere il cavo lontano da superfici riscaldate.
Non lasciare il cavo appeso al bordo del tavolo o del piano della cucina dove può essere tirato inavvertitamente da bambini o animali domestici.
Non arrotolare il cavo intorno a bordi o angoli taglienti.
Non lasciare la presa inserita incustodita. Quando non si utilizza, staccare la spina.
Prima di staccare la spina, spegnere tutto.
Non staccare la spina tirando il cavo. Per staccare la spina, afferrare la spina e non il cavo.
Staccare sempre la spina prima di qualsiasi tipo di manutenzione, prima di collegare o scollegare gli accessori o prima di cambiare accessorio.
Conservare il cavo in modo sicuro per evitare pericoli.

RISCHIO DI LESIONI PERSONALI
Posizionare sempre l'apparecchio lontano dal bordo del piano di lavoro, su una superficie piatta, ferma e resistente al calore con spazio sufficiente intorno ai lati.
Non inserire nessun oggetto nelle aperture o nella copertura dell'apparecchio.
Non posizionare alcun cartone, plastica o carta all'interno o sull'apparecchio se non indicato nelle istruzioni.
Non usare l'apparecchio vicino ad alcuna superficie combustibile.
Utilizzare solo pentole adatte, se possibile.
Non utilizzare all'esterno o vicino a fonti di calore.
Fare attenzione a non toccare alcuna superficie che può riscaldarsi durante l'uso.
Fare attenzione a non toccare alcuna superficie che può rimanere calda per un certo periodo dopo l'uso.
Non utilizzare mai l'apparecchio quando è vuoto.
Non sovraccaricare l'apparecchio.
Quando si utilizza per la prima volta, l'apparecchio può emettere un odore di "nuovo" o del vapore. Scomparirà dopo qualche utilizzo.
Non sollevare o spostare l'apparecchio quando è in uso.
Non utilizzare continuativamente per periodi più lunghi di quelli indicati sul prodotto o nelle istruzioni.
Prima di cambiare gli accessori o pulire, accertarsi che l'apparecchio sia spento e scollegato.
Utilizzare solo come descritto nel presente manuale e solo con gli accessori consigliati da DOMU Brands.

PULIZIA E MANUTENZIONE
Non mettere in ammollo né immergere alcuna parte elettrica o componente collegata a una presa.
Si consiglia il lavaggio a mano; immergere in acqua saponata tiepida e strofinare con una spugna morbida.
Per rimuovere le macchie ostinate utilizzare una spugnetta non abrasiva. Non usare detergenti abrasivi o spugne abrasive per la pulizia.
Non lavare alcun componente elettrico o di riscaldamento e o componente collegato a una presa in lavastoviglie.

SPECIFICHE TECNICHE

Tensione nominale 220-240V
Potenza nominale 1470W
Frequenza nominale 50-60Hz

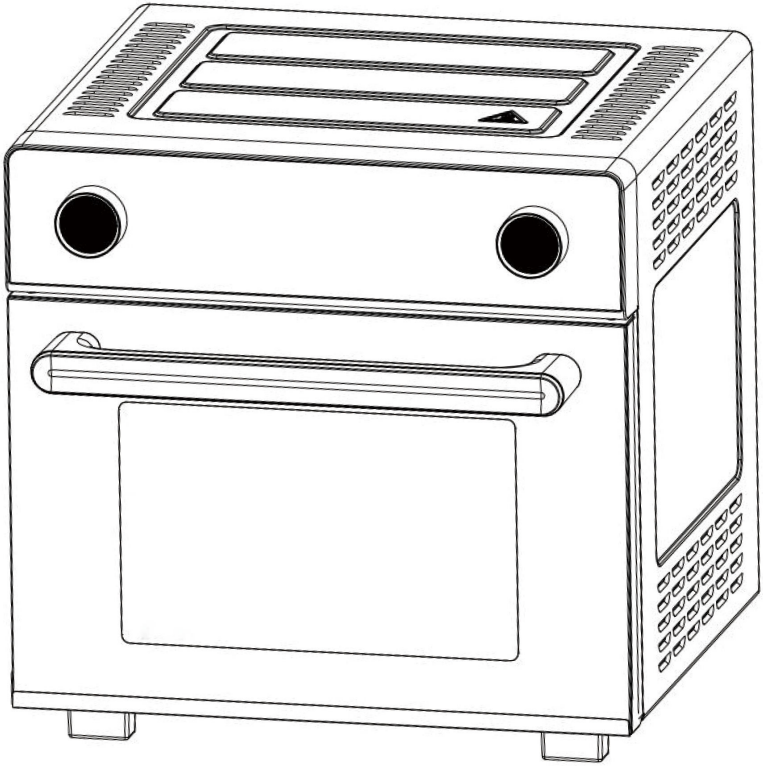

BEFORE FIRST USE/ AVANT LA PREMIÈRE UTILISATION / VOR ERSTER NUTZUNG/

ANTES DEL PRIMER USO/ PRIMA DEL PRIMO UTILIZZO

1. Before using your oven for the first time, carefully remove all the accessories, packaging materials and recycle appropriately.

2. Remove the parts from the box then wash all removable parts with warm, soapy water and anon-abrasive sponge. Wipe inside of the oven with damp cloth or sponge. Blot dry with paper towels to be sure the appliance is completely fry before using.

3. Place the appliance on a flat, horizontal and stable surface (make sure surface is heat-resistant). DO NOT OPERATE THIS APPLIANCE ON THE SAME CIRCUIT WITH ANOTHER APPLIANCE.

4. Before using the appliance, always place the crumbs tray underneath the bottom heating elements.

5. For the first time use only, set the TEMPERATURE KNOB''to MAX, set the function setting to Toast/Bread"'and set the TIMER'"to 15 minutes (with the oven empty). NOW PRESS THE START/STOP button and let the unit run for the full 15 minutes. This will burn off any of the protecting oil remaining in the oven.

6. Please tear off the film on the knob digital control panel before using,this film is for protecting the control panel not been scratched.

NOTE: The oven may smoke during this process. This is normal for a new appliance as the protecting oil evaporates. The smoke will not last longer than the 15 minutes for the appliance that runs for the first time.

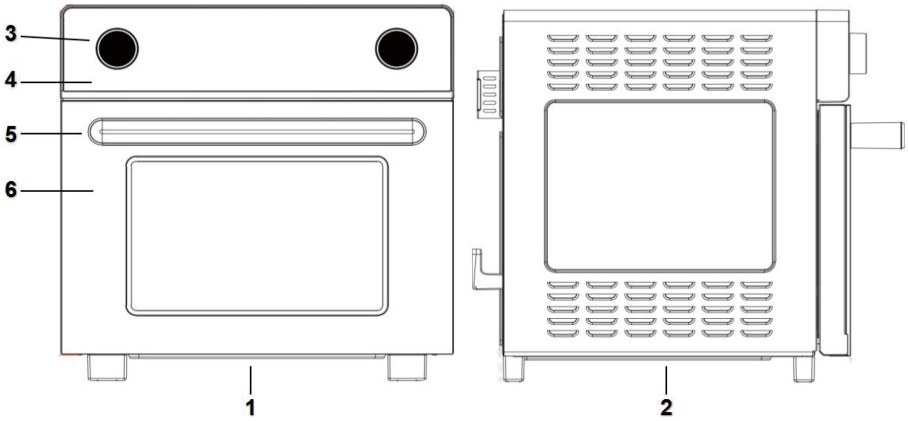
3
4
5
6
1
2

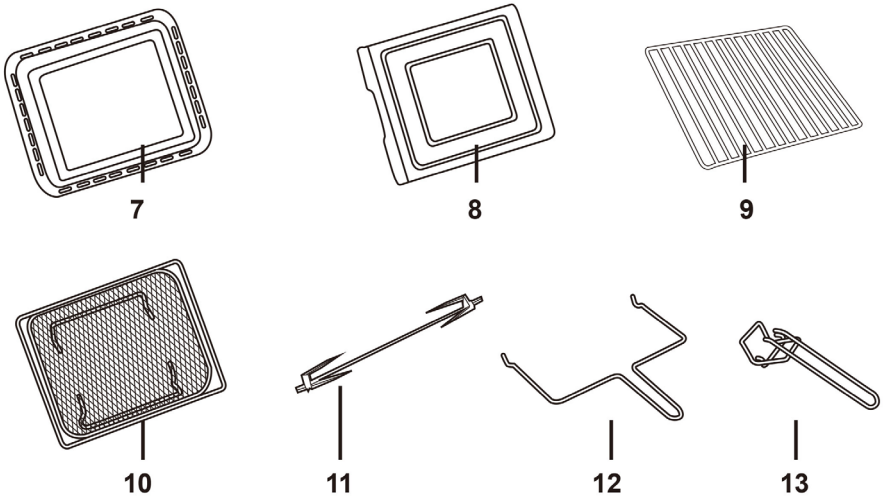
7
8
9
10
11
12
13

EN

1.Air Fry Oven Front view
2. Air Fry Oven side view
3. Knobs
4.Touch LED electronic screen
5.Door handle
6.Double-layer glass door
7.Baking tray**
8.Crumb tray/drip pan
9.Rack
10.Air frying basket
11.Rotisserie spit and forks
12.Rotisserie handle
13.Tong

ES

1. vista frontal de la freidora de aire
2. vista lateral de la freidora de aire
3. Perilla
4. pantalla electrónica LED táctil
5. manija de puerta
6. puerta de vidrio de doble capa
7. bandeja de horno * *
8. disco de escombros / disco de goteo
9. bastidores
10. cesta de fritura de aire
11. barbacoas y tenedores
12. mango de la barbacoa
13. niños

FR

1. Vue de face du four de friture d'air
2. Vue latérale du four de friture à air
3. Bouton
4. Écran électronique tactile LED
5. Poignée de porte
6. Porte à double vitrage
7. Plaque de cuisson * *
8. Disque de détritus / disque de goutte
9. Rack
10. Panier de friture d'air
11. Barbecue et fourchette
12. Poignée de magasin de rôti
13. Enfants

IT

1.Air Fry Forno Vista frontale
2. Air Fry Forno vista laterale
3. Manopole
4. Touch LED schermo elettronico
5. Maniglia della porta
6. Porta di vetro a doppio strato
7.Vassoio da forno
8.Vassoio per crumb/vaschetta per gocciolamento
9.Rack
10.Cestino per friggere aria
11.Rotisserie sputi e forchette
12.Maniglia per rotisserie
13.Tong

DE

1.Air Frittierofen Frontansicht
2. Air Fry Ofen Seitenansicht
3. Knöpfe
4.Touch LED elektronischer Bildschirm
5.Türgriff
6.Doppellagige Glastür
7.Backblech**
8.Crumb Tablett/Tropfpfanne
9.Rack
10.Air Bratkorb
11.Rotisserie Spucke und Gabeln
12.Rotisseriegriff
13.Tong

** Baking tray doubles as a drip tray when placed in bottom slot to catch excess oil and foodbits.

QUICK GUIDE TO KNOW YOUR CONTROL PANEL

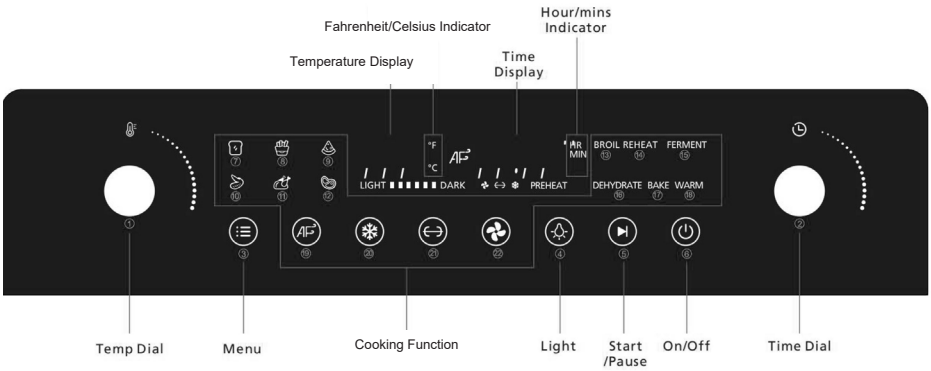

1. TEMP DIAL

Turn the Temp dial to the desired temp when you need for cooking and then press ⏻ to begin cooking cycle.

2.TIME DIAL

Turn the Time dial to the desired time when you need for cooking and then press ⏻ to begin cooking cycle.

3.MENU

Press the ⏯ button to select cooking function. Keep tapping this button until your desired function is selected. The selected function will flicker.

After turning on the air fryer oven, press and hold ⏯ the button can switch between Fahrenheit and Celsius.

4.LIGHT

Press the button to turn on/off the light inside oven.

5.START I PAUSE

Press the button to start or pause the cooking process.

6.ON/OFF

Connecting the air fryer oven to the power source , the appliance will enter sleeping mode. The ⏻ light will turn on. Press and hold the ⏻ button will turn on /off the oven and enter standby mode. The machine can only work properly when the front door is closed.

During operation, press this button to stop the cooking process and return to standby mode.

Instructions
HOW TO USE THE COOKING FUNCTION

7. TOAST

This function browns the outside of your bread while keeping the inside soft. it is also ideal for English muffins and frozen waffles.

Tap the Menu button to select Toast cooking function. The preset temperature is 450F/230℃ and preset time is 3 minutes.The darkness setting will be indicated by the row of small squares on the display **LIGHT▮▮▮▮▮▮ DARK** . Turn the Time dial (1-12 minutes) to select darkness. The icon will light up according to the selected setting.Then press to start toasting, the cooking time will begin to count down.

8.CHIPS

Tap the Menu button to select Chips cooking function. The preset temperature is 320F/160℃ and preset time is 16 minutes. Press start preheating. When the oven reaches setting temperature, preheat finishes. The display will show “Add Food’ for 10 seconds and beep for 3 seconds. Put the food inside the oven and close the door, the cooking will automatically start. You can also put the food inside the oven before preheat, the oven will automatically preheat and start to cook. But preheat without food will lead to a better cooking result.

With this cooking function you can customize the temperature(320F-390*F/160℃-200℃) and time(0-30 minutes) anytime before or during cooking.

9.PIZZA

This function melts and browns cheese and toppings while crisping crust.

Tap the Menu button to select Pizza cooking function. The preset temperature is 320F/160℃ and preset time is 18 minutes. Press to start preheating. When the oven reaches setting temperature, preheat finishes. The display will show ‘Add Food’ for 10 seconds and beep for 3 seconds. Put the food inside the oven and close the door, the cooking will automatically start. You can also put the food inside the oven before preheat, the oven will automatically preheat and start to cook. But preheat without food will lead to a better cooking result.

With this cooking function you can customize the temperature(320F-390F/160℃-200℃) and time(0-30 minutes) anytime before or during cooking.

10.CHICKEN WING

Tap the Menu button to select Chicken Wing cooking function. The preset temperature is 390’F/200℃ and preset time is 16 minutes. Press to start preheating. When the oven reaches setting temperature, preheat finishes. The display will show ‘Add Food’ for 10 seconds and beep for 3 seconds. Put the food inside the oven and close the door, the cooking will automatically start.

You can also put the food inside the oven before preheat, the oven will automatically preheat and start to cook. But preheat without food will lead to a better cooking result.

With this cooking function you can customize the temperature(320’F-450F/160℃-230℃) and time(0-30 minutes) anytime before or during cooking.

11.CHICKEN

This function roasts whole chicken or other kinds of meat.

Tap the Menu button to select Chicken cooking function. The preset temperature is 450℉/230℃ and preset time is 35 minutes. Press to start preheating. When the oven reaches setting temperature, preheat finishes. The display will show ‘Add Food’ for 10 seconds and beep for 3 seconds. Put the food inside the oven and close the door, the cooking will automatically start.

You can also put the food inside the oven before preheat, the oven will automatically preheat and start to cook, But preheat without food will lead to a better cooking result.
With this cooking function you can customize the temperature(320F-450F/160℃-230℃) and time(0-60 minutes) anytime before or during cooking.
**You can use ROTISSERIE to roast chicken more evenly.

12.STEAK

Tap the Menu button to select Steak cooking function. The preset temperature is 450F/230℃ and preset time is 7 minutes. The preset program will lead to a MEDIUM-WELL cooking result.
Press to start preheating. When the oven reaches setting temperature, preheat finishes.The display will show 'Add Food' for 10 seconds and beep for 3 seconds. Put the food inside the oven and close the door, the cooking will automatically start.
After 4 minutes the display will show 'Flip' for 10 seconds and beep for 3 seconds. Flip the steak and close the door, the cooking will continue.
You can also put the food inside the oven before preheat, the oven will automatically preheat and start to cook. But preheat without food will lead to a better cooking result.
With this cooking function you can customize the temperature(320℉-450℉/160℃-230℃) and time(0-30 minutes) anytime before or during cooking, based on the thickness or weight of the steak.

13.BROIL

Broiling function can be used for beef, chicken, pork, fish, and more. It also can be used to top-brown casseroles and gratins.
Tap the Menu button to select BROIL cooking function. The preset temperature is 250℉/120℃ and preset time is 7 minutes
Turn the Time dial to adjust cooking time. Press to start preheating. When the oven reaches setting temperature, preheat finishes. The display will show 'Add Food' for 10 seconds and beep for 3 seconds. Put the food inside the oven and close the door, the cooking will automatically start.
You can also put the food inside the oven before preheat, the oven will automatically preheat and start to cook. But preheat without food will lead to a better cooking result. With this cooking function you can customize the temperature(195℉-450℉/90℃-230℃)and time(0-2 hours) anytime before or during cooking.

14.REHEAT

Use this function to reheat leftovers.
Tap the Menu button to select REHEAT cooking function. The preset temperature is 205℉/95℃ and preset time is 5 minutes. Press to start reheating. the cooking time will begin to count down.
With this cooking function you can customize the temperature(195℉-450℉/90℃-230℃) and time(0-2 hours) anytime before or during cooking.

15.FERMENT

This function is designed to precisely hold low temperatures, providing an ideal environment for proofing bread, rolls, pizza, and dough. It can also be used for making yogurt with an appropriate recipe (using 105°F/40℃ temperature and 12 hours time).
Place dough in a heat-safe container. Cover and place on the food tray or wire rack. Insert at low position and close the oven door. Tap the Menu button to select FERMENT cooking function.Select desired temperature and time by turning the dials. Press to start. the cooking time will begin to count down.

With this cooking function you can customize the temperature(70°F-115°F/20℃-45℃) and time(0-12 hours) anytime before or during cooking.

16.DEHYDRATE

The Dehydrate function combines low and stable heat to dry out food without cooking. Good for drying fruit or vegetables chips.

Place the food to be cooked on the wire rack/food tray. Insert the rack/tray into the middle position inside of the oven and close the door.

Tap the Menu button to select DEHYDRATE cooking function. The preset temperature is140F/60Cand preset time is 5 hours. Press to start. The cooking time will begin
to count down.

With this cooking function you can customize the temperature(85°F-175°F/30℃-80℃) and time(0-24 hours) anytime before or during cooking.

17.BAKE

The Bake function cooks food evenly throughout. This function is ideal for baking cakes, muffins,brownies and pastries. Insert the rack/tray into the middle position inside of the oven and close the door.

Tap the Menu button to select BAKE cooking function. The preset temperature is 355°F/180℃ and preset time is 20 minutes. Press to start preheating. When the oven reaches setting temperature, preheat finishes. The display will show 'Add Food' for 10 seconds and beep for 3 seconds. Put the food inside the oven and close the door, the cooking will automatically start.

You can also put the food inside the oven before preheat, the oven will automatically preheat and start to cook. But preheat without food will lead to a better cooking result.

With this cooking function you can customize the temperature(150°F-450°F/65℃-230℃) and time(0-4 hours) anytime before or during cooking.

18.WARM

This function is designed to keep food warm at the recommended temperature to prevent bacterial growth (160°F/70°C or above).

Place hot food in a heat-safe container. Cover and place on the food tray.

Tap the Menu button to select WARM cooking function. The preset temperature is 150°F/65℃ and preset time is 1 hour. Press to start. The cooking time will begin to count down. With this cooking function you can customize the temperature(85°F-175°F/30℃-80℃) and time(0-24 hours) anytime before or during cooking.

19. AIR FRY (WITH HIGH SPEED FAN)

Tap the button to select Air Fry cooking function. The preset temperature is 355°F/180℃ and preset time is 20 minutes. Press to start preheating. When the oven reaches setting temperature, preheat finishes. The display will show 'Add Food' for 10 seconds and beep for 3 seconds. Put the food inside the oven and close the door, the cooking will automatically start. You can also put the food inside the oven before preheat, the oven will automatically preheat and start to cook. But preheat without food will lead to a better cooking result.

With this cooking function you can customize the temperature(105°F-450°F/40℃-230℃) and time(0-60 minutes) anytime before or during cooking.

20.DEFROST

Place the frozen food to be cooked on the wire rack/food tray. insert the rack/tray into the middle position inside of the

oven and close the door.

Tap the button to select Defrost cooking function. The preset temperature is 120°F/50℃ and preset time is 40 minutes. Press to start. The cooking time will begin to count down.With this cooking function you can customize the temperature(70°F-120°F/20℃-50℃) and time(0-150 minutes) anytime before or during cooking.

21. ROTISSERIE

Tap the button to enable Rotisserie function optionally when using other cooking functions.The Rotisserie function is a rotating spit with 2 forks to fix the food, good for whole chicken roasting.Place whole chicken on the rotisserie spit and fix it by the forks on both sides, then insert the spit into the rotisserie hole position and close the door.

Rotating basket(not included in this product) can also be used. Place food inside the rotating basket, then insert the spit into the rotisserie hole position and close the door. Be careful not to overfill the basket as food may expand during cooking.

22. CONVECTION (WITH LOW SPEED FAN)

When you are cooking with BROIL, REHEAT, FERMENT, BAKE and WARM functions, you can tap the button to enable/disable the convection fan.

NOTE:

1. The fan inside the appliance will still keep working for 1 minute after finishing cooking For better heat dissipation.

2. If the door of the appliance is open during cooking, the appllance will pause working. It will continue working with the set program when the door is closed again.

COOKING FUNCTIONS & SETTINGS

There are 14 preset cooking functions: air fry, defrost, broil, reheat, ferment, dehydrate, bake,warm, toast, chips, pizza, wings, chicken, steak:

Preset Functions	Default Time	Time Range	Default Temperature	Temperature Range
Air fry	20 minutes	0-60 minutes	180°C/355°F	40-230°C/ 105-450°F
Defrost	40 minutes	0-150 minutes	50°C/120°F	20-50°C/70-120°F
Broil	7 minutes	0-120 minutes	120°C/250°F	90-230°C/195-450°F
Reheat	5 minutes	0-120 minutes	95°C/205°F	90-230°C/195-450°F
Ferment	40 minutes	0-12 hours	40°C/105°F	20-45°C/70-115°F
Dehydrate	5 hours	0-24 hours	60°C/140°F	30-80°C/85-175°F
Bake	20 minutes	0-4hours	180°C/355°F	65-230°C/150-450°F
Warm	1 hour	0-24 hours	65°C/150°F	30-80°C/85-175°F
Bread/Toast	3 minutes	0-12 minutes	230°C/450°F	Not adjustable
Chips	16 minutes	0-30 minutes	160°C/320°F	160-200°C/320-390°F
Pizza	18 minutes	0-30 minutes	160°C/320°F	160-200°C/320-390°F
Wings	16 minutes	0-30 minutes	200°C/390°F	160-230°C/320-450°F
Chicken	35 minutes	0-60 minutes	230°C/450°F	160-230°C/320-450°F
Steak	7 minutes	0-30 minutes	230°C/450°F	160-230°C/320-450°F

For time and temperature settings, see the table above for reference.

Please note:Time and temperature are indicative, cooking results can vary on food or quantity.

COOKING GUIDE

Air fry: Air frying is a basic function of this unit. With this function, users can deep-fry food for crispy results, requiring little or no oil. Not all food should be tossed in oil, frozen food and food with high fat such as chicken wings or bacon do not require oil.To achieve crispy and browned results on food such as hand-cut fries or vegetables, it is suggested to coat food with one tablespoon of oil evenly. Under this mode, 6 heating elements and high speed fan are turned on altogether. This mode is perfect for French fries, chicken wings, chicken nuggets etc. You can also air fry other food by adjusting the time and temperature as desired.

Defrost: With this function, users can defrost frozen food quickly. For time and temperature settings, please check the table above, both can be adjusted according to the size or thickness of the food.

Broil: This function is mainly for cooking meat, such as fish, beef, chicken, pork chop etc.For desired time and temperature, please check the table above for reference. Under this mode.The upper 4 heating elements are turned on. For better cooking results, preheat is highly recommended. As this function takes short cooking time and requires high temperature. it is suggested to watch over the food while cooking to avoid overcooking.

Reheat: With this function, users can reheat leftovers without overcooking or drying them out.Under this mode, 6 heating elements are tured on. For time and temperature settings, please refer to the table above.

Ferment: This function is designed to precisely hold low temperatures, providing an ideal environment for proofing bread, rolls, pizza and dough etc. it can also be used for making yogurt with an appropriate recipe (using 105°F /40°C temperature and 12 hours time). Under this mode, the upper 2 heating elements and lower 2 heating elements are turned on.

Dehydrate: This function can be used for dehydrating fruits, herbs and flowers and removes moisture from food so that you can keep them for a longer period of time.Under this mode,The upper 4 elements and low speed fan are turned on altogether.For time and temperature settings, please refer to the table above.

Bake: This function is the same as that of the conventional oven. it is suitable for food such as biscuits, cakes, muffins, cookies etc. Under this mode, 6 heating elements and high speed fan are turned on altogether. For time and temperature, please refer to the table above.

Warm: With this function, users can keep the food warm after grilling, baking, or toasting prior to serving.Under this mode,the upper 2 heating elements and lower 2 heating elements are turned on.

Toast/Bread: With this function, users can toast bread to perfection, crunchy outside and soft inside. Under this mode, 6 heating elements and high speed fan are working altogether.To achieve better results, put the food at the center of the wire rack evenly, then place the wire rack in the middle position inside the oven. Toasting times will vary depending on the type of bread toasted. Sweet and fruit breads generally take less time than white or wholemeal bread.

Chips: With this function , users can make delicious French fries/chips. You can adjust the time and temperature according to the amount or size of chips. Under this mode, 6 heating elements and high speed fan are turned on together.For better results, coat the chips with proper oil, put the chips onto the air fry basket evenly, then place the air fry basket in the middle rack position inside the oven.

Pizza: With this function, users can cook crispy and delicious pizza. Under this mode, 6 heating elements and low speed fan are turned on altogether. You can adjust the time and temperature according to the size of the pizza. When cooking with this function, put the pizza at the center ofthe bake pan, place the bake pan in the middle position inside the oven. It is suggested to rotate the pizza 180° halfway through cooking.

Chicken wings: With this function, users can make crispy and delicious chicken wings. Under this mode, 6 heating elements and high speed fan are turned on together. When cooking with this function, place the seasoned wings on the baking pan or rack, then place the pan/rack in the middle rack position inside the oven. Time and temperature can be adjusted according to the amount or size of the wings.

Chicken: This function is for roasting tender and juicy whole chicken. Under this mode, 6 heating elements and high speed fan are turned on altogether.When cooking with this function, place the seasoned whole chicken on the rotisserie spit and fix it by the forks on both sides, then use the rotisserie handle to insert the long end of the rotisserie spit into the rotisserie hole position.Once the long end of spit is in the hole, place the short end of the spit onto the rotisserie notchon the other side. Ensure your chicken is well-balanced so that the spit spins without snagging or grazing any heating elements when it rotates.Place the drip tray under the lower heating elements to catch any fatty residue from the chicken. Close the oven door and then press the rotisserie button, If your version of the unit is without rotisserie function, just put the chicken on the bake pan, then place the bake pan at level 2 or 3 position.

Steak: This function is for perfect steak. Under this mode, the default setting will lead to adoneness of ‘MEDIUM WELL’. 6 heating elements and high speed fan are turned on altogether.Preheat is highly recommended when you cook with this function. Put the seasoned steak with salt, pepper and a bit of oil on the bake pan, place the bake pan at level 2 position and start to cook. After cooking for 7 minutes, the unit will remind you to flip the steak. You can adjust the time and temperature according to the desired degree of doneness. Ensure to place the drip tray on the bottom of the oven to catch any fatty residue from the steak.

Chicken wings: With this function, users can make crispy and delicious chicken wings. Under this mode, 6 heating elements and high speed fan are turned on together. When cooking with this function, place the seasoned wings on the baking pan or rack, then place the pan/rack in the middle rack position inside the oven. Time and temperature can be adjusted according to the amount or size of the wings.

Chicken: This function is for roasting tender and juicy whole chicken. Under this mode, 6 heating elements and high speed fan are turned on altogether.When cooking with this function, place the seasoned whole chicken on the rotisserie spit and fix it by the forks on both sides, then use the rotisserie handle to insert the long end of the rotisserie spit into the rotisserie hole position.Once the long end of spit is in the hole, place the short end of the spit onto the rotisserie notch on the other side. Ensure your chicken is well-balanced so that the spit spins without snagging or grazing any heating elements when it rotates.Place the drip tray under the lower heating elements to catch any fatty residue from the chicken. Close the oven door and then press the rotisserie button. If your version of the unit is without rotisserie function, just put the chicken on the bake pan, then place the bake pan at level 2 or 3 position.

Steak: This function is for perfect steak. Under this mode, the default setting will lead to a doneness of ‘MEDIUM WELL’. 6 heating elements and high speed fan are turned on altogether.Preheat is highly recommended when you cook with this function. Put the seasoned steak with salt, pepper and a bit of oil on the bake pan, place the bake pan at level 2 position and start to cook. After cooking for 7 minutes, the unit will remind you to flip the steak. You can adjust the time and temperature according to the desired degree of doneness. Ensure to place the drip tray on the bottom of the oven to catch any fatty residue from the steak.

CLEAN & MAINTENANCE

* Make sure to clean the appliance after each use. Cleaning regularly prevents the accumulation of grease and helps avoid unpleasant smells.
* Before cleaning, always ensure the appliance is disconnected from the power supply and has completely cooled down.
* Wipe the interior and exterior of the appliance with a damp cloth and then dry thoroughly. Do not immerse the unit in water or wash under running water.
* Wash the mesh basket, baking tray and wire rack in warm soapy water, then rinse and dry thoroughly.
* Never use abrasive products in the cavity. Make sure no water or damp penetrates the appliance except the cavity.
* Ensure all parts are clean and dry before placing them back inside the appliance.

NOTE: Do not use harsh or abrasive cleaners to clean the air fryer oven, as this may damage the appliance's finishing.

TECHNICAL SPECIFICATIONS

Model No.	2501014
Capacity	18L/ 19 QT
Rated voltage	220-240V,50- 60Hz
Power consumption	1470W
Measurement	372×409×367mm
Net weight	9 KGS

TROUBLESHOOTING

Please perform these troubleshooting before sending the appliance to the service center.

Problem	Possible Cause	Solution
The oven does not work	1.Unit may NOT be plugged in. 2.You have not pressed the start/stop button. 3.The oven door is not closed properly.	1.Plug power cord into wall socket. 2.Select desired function, and press start button. 3.Make sure oven door is closed securely.
Food not being cooked thoroughly	1.Too much amount of food. 2.The temperature was set too low.	1.Reduce the food amount. 2.Reset the temperature higher, then continue cooking.
Food not cooked evenly	1.The tray or rack is not placed at right position. 2.Certain food not rotated or flipped during the cooking	1.Place the tray or rack at the right position. 2.Flip, shake or turn food halfway during cooking process and continue cooking.
White smoke emitting from the unit while cooking	1.There is oil residue in the oven. 2.You are cooking greasy food	1.Wipe down or remove excess oil. 2.Try to avoid cooking greasy/fatty food in the appliance.
Chips not crispy	1.Too little oil and too much moisture. 2.Chips piece is too large	1.Add proper oil to the chips and dry them before cooking. 2.Cut the chips into smaller pieces.

EN

DISPOSAL INFORMATION Please recycle where facilities exist. Check with your local authority for recycling advice.

CUSTOMER SERVICE If you are having difficulty using this product and require support, please contact support@domu.co.uk

WARRANTY To register your product and find out if you qualify for a free extended warranty please go to www.vonshef.com/warranty.
Please retain a proof of purchase receipt or statement as proof of the purchase date. The warranty only applies if the product is used solely in the manner indicated in the warnings page of this manual, and all other instructions have been followed accurately. Any abuse of the product or the manner in which it is used will invalidate the warranty. Returned goods will not be accepted unless re-packaged in its original packaging and accompanied by a relevant and completed returns form. This does not affect your statutory rights. No rights are given under this warranty to a person acquiring the appliance second-hand or for commercial or communal use.

COPYRIGHT All material in this instruction manual are copyrighted by DOMU Brands.Any unauthorised use may violate worldwide copyright, trademark, and other laws.

FR

INFORMATIONS RELATIVES AU RECYCLAGE
Veuillez recycler là où il existe des installations adéquates. Vérifiez auprès de vos autorités locales pour obtenir des conseils sur le recyclage.

SERVICE CLIENT Si vous rencontrez des difficultés pour utiliser ce produit et avez besoin d'assistance, veuillez contacter
support@domu.co.uk

GARANTIE Pour enregistrer votre produit et découvrir si vous vous qualifiez pour une extension gratuite de garantie, rendez-vous sur
www.vonshef.com/warranty. Conservez une preuve d'achat, reçu ou attestation, pour prouver la date de l'achat. La garantie ne s'applique que si le produit a été utilisé de la manière indiquée dans la section de la page des avertissements de ce manuel et que toutes les instructions ont été suivies de manière précise. Tous les abus réalisés sur le produit, dans la manière dont il a été utilisé, rendront la garantie caduque. Les marchandises renvoyées ne seront acceptées que si elles sont remballées dans leur emballage d'origine et accompagnées d'un
formulaire de retour adéquat et rempli. Ceci n'affecte pas vos droits statutaires. Cette garantie n'accorde aucun droit à une personne obtenant le produit de seconde main ou à des fins d'utilisation commerciale ou communale.

DROITS D'AUTEUR Toutes les informations de ce manuel d'utilisation sont protégées par droit d'auteur par DOMU Brands. Toute utilisation non autorisée pourrait enfreindre les lois mondiales de droit d'auteur, de marque déposée ainsi que d'autres lois.

DE

ENTSORGUNG Bitte entsorgen Sie das Produkt an geeigneten Entsorgungsstellen. Fragen Sie bei Ihrer Gemeinde nach.

KUNDENSERVICE Wenn Sie Schwierigkeiten mit diesem Produkt haben und Unterstützung benötigen, wenden Sie sich bitte an
support@domu.co.uk

GARANTIE Um Ihr Produkt zu registrieren und zu erfahren, ob eine kostenlose verlängerte Garantie möglich ist, gehen Sie bitte auf www.vonshef.com/warranty. Bitte behalten Sie eine Rechnung oder den Kassenzettel als Nachweis des Einkaufdatums auf. Die Garantie gilt nur, wenn das Produkt nur wie in dieser Anleitung beschrieben verwendet wurde und wenn alle Anweisungen befolgt wurden. Jeglicher Missbrauch des Produkts oder der Art und Weise, in der es verwendet wird, macht die Garantie ungültig. Zurückgegebene Artikel werden nur akzeptiert, wenn sie sich in der Originalverpackung befinden und wenn ein relevantes und vollständig ausgefülltes Rücksendeformular enthalten ist. Dies betrifft nicht Ihre gesetzlichen Ansprüche. Für Artikel, die gebraucht erworben wurden, oder die kommerzielle oder gemeinschaftlich genutzt werden, entstehen keinerlei Ansprüche auf Garantie.

COPYRIGHT Alle Materialien in dieser Anleitung stehen unter Copyright von DOMU Brands Ltd.Jede unautorisierte Verwendung kann das weltweite Copyright, die Handelsmarke und andere Gesetze verletzen.

ES

INFORMACION DE DESECHO Por favor, reciclad en las instalaciones correspondientes. Consultad con vuestra autoridad local para obtener consejos de reciclaje.

SERVICIO AL CLIENTE Si tiene dificultades para utilizar este producto y necesita asistencia, contacte con
support@domu.co.uk

GARANTÍA Para registrar vuestro producto y averiguar si califica para una garantía extendida gratuita, vaya a www.vonshef.com/warranty. Conservad un comprobante de recibo de compra o extracto como prueba de la fecha de compra. La garantía solo se aplica si el producto se utiliza únicamente de la manera indicada en la página de advertencias de este manual, y todas las demás instrucciones se han seguido con precisión. Cualquier abuso del producto o la manera en que se use invalidará la garantía. Los productos devueltos no se aceptarán a menos que se vuelvan a empaquetar en su embalaje original y acompañados por un formulario de devolución completo y pertinente. Esto no afecta sus derechos legales. No se otorgan derechos bajo esta garantía a una persona que adquiere el aparato de segunda mano o para uso comercial o comunitario

DERECHOS DE AUTOR Todo el material en este manual de instrucciones está protegido por DOMU Brands. Cualquier uso no autorizado puede violar los derechos de autor, marcas comerciales y otras leyes en todo el mundo.

IT

INFORMAZIONI SULLO SMALTIMENTO Si prega di riciclare nelle apposite strutture. Chiedere una consulenza alle autorità competenti per il riciclo.

SERVIZIO CLIENTI Se si riscontrano difficoltà nell'utilizzo di questo prodotto e si richiede supporto, contattare support@domu.co.uk

GARANZIA Per registrare il prodotto e capire se hai diritto all'estensione di garanzia, vai su www.vonshef.com/warranty. Si prega di conservare la ricevuta del pagamento quale prova della data d'acquisto. La garanzia si applica solo se il prodotto viene utilizzato esclusivamente come indicato nella pagina delle Avvertenze del presente manuale e se tutte le altre informazioni vengano accuratamente seguite. Qualsiasi abuso nell'utilizzo di questo prodotto invalidera la garanzia. I resi non saranno accettati se non riposti nella confezione originale ed accompagnati da un modulo di reso completo. Ciò non pregiudica i propri diritti obbligatori. La presente garanzia non attribuisce alcun diritto a coloro che acquistano prodotti di seconda mano o per fini commerciali o condivisi.

COPYRIGHT Tutto il materiale contenuto nel presente manuale delle istruzioni è protetto da copyright di DOMU Brands. Qualsiasi uso non autorizzato potrebbe violare il copyright a livello mondiale, marchio ed altre leggi.

THANK YOU

Thank you for purchasing your product/appliance.
Should you require further assistance with your purchase, you can contact us at
support@domu.co.uk
VonShef is a registered trademark of DOMU Brands Ltd. Made in China for DOMU Brands. DOMU Brands Ltd.
support@vonhaus.com
Unit 30, Stakehill Industrial Estate, Middleton, Manchester M24 2RW.
Authorised Representative:
Authorised Representative Service,77 Camden Street Lower, Dublin, D02 XE80, Ireland.

MERCI

Merci d'avoir acheté notre produit/appareil.
Si vous aviez besoin d'aide suite à votre achat, vous pouvez nous contacter a
support@domu.co.uk
VonShef est une marque déposée de DOMU Brands Ltd. Fabriqué en Chine pour DOMU Brands. DOMU Brands Ltd.
support@vonhaus.com
Unit 30, Stakehill Industrial Estate, Middleton, Manchester M24 2RW.
Authorised Representative:
Authorised Representative Service,77 Camden Street Lower, Dublin, D02 XE80, Ireland.

VIELEN DANK

Vielen Dank, dass Sie das Produkt/Gerät gekauft haben. Sollten Sie weitere Unterstützung benötigen, können Sie uns gerne unter (email) kontaktieren.
support@domu.co.uk
VonShef ist eine registrierte Handelsmarke von DOMU Brands Ltd. Hergestellt in China für DOMU Brands. DOMU Brands Ltd.
support@vonhaus.com
Unit 30, Stakehill Industrial Estate, Middleton, Manchester M24 2RW.
Authorised Representative:
Authorised Representative Service,77 Camden Street Lower, Dublin, D02 XE80, Ireland.

GRACIAS

Gracias por comprar vuestro producto/aparato
Si requiere asistencia con vuestra compra, podeis contactarnos a
support@domu.co.uk
VonShef es una marca registrada de DOMU Brands Ltd. Hecha en China para DOMU Brands.DOMU Brands Ltd.
support@vonhaus.com
Unit 30, Stakehill Industrial Estate, Middleton, Manchester M24 2RW.
Authorised Representative:
Authorised Representative Service,77 Camden Street Lower, Dublin, D02 XE80, Ireland.

GRAZIE

Grazie per aver acquistato il prodotto.
Per ulteriore assistenza sul tuo acquisto, puoi contattarci all'indirizzo email
support@domu.co.uk
VonShef è un marchio registrato di DOMU Brands Ltd. Made in Cina per DOMU Brands. DOMU Brands Ltd.
support@vonhaus.com
Unit 30, Stakehill Industrial Estate, Middleton, Manchester M24 2RW.
Authorised Representative:
Authorised Representative Service,77 Camden Street Lower, Dublin, D02 XE80, Ireland.