FCL-20871_AM

Yardley - Polished Chrome LED Flush Ceiling Lamp



LIGHT SOURCE DATA

- 19W LED (included)
- Lamp direction - Indirect
- Non-dimmable
- 3000K (Warm White)
- 900Lm
- 47.4Lm/W
- 20000 Liftetime
- Energy class: G
- 80 CRI

DIMENSION DATA

- Height 95mm
- Diameter 415mm

- Weight 0.60kg

SPECIFICATION

- Manufacturer warranty for 2 years from date of purchase
- Polished chrome plate and opal PC
- IP20
- No
- Class II - Double Insulated, No Earth
- 240V
- Assembly required? No
- UKCA Marking, Energy Efficient, Energy Saving

CERTIFICATION

CONTACT

www.firstchoicelighting.co.uk info@firstchoicelighting.co.uk

FCL-20871_AM

Yardley - Polished Chrome LED Flush Ceiling Lamp

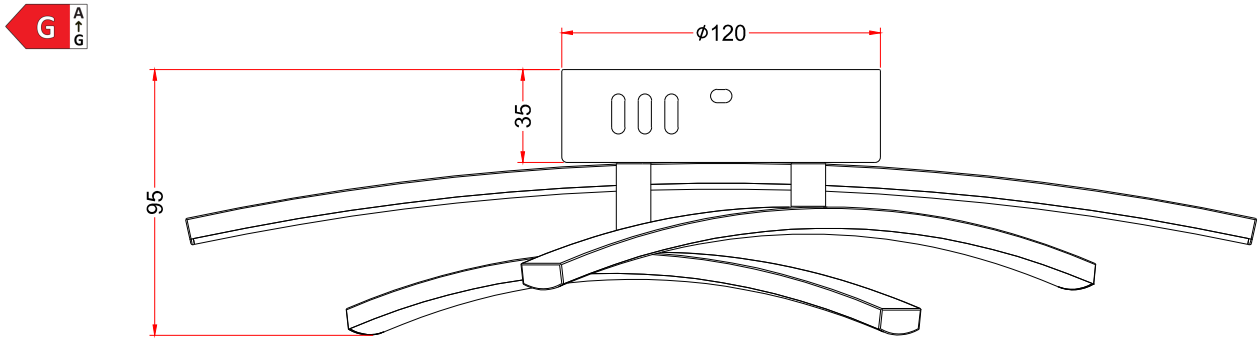

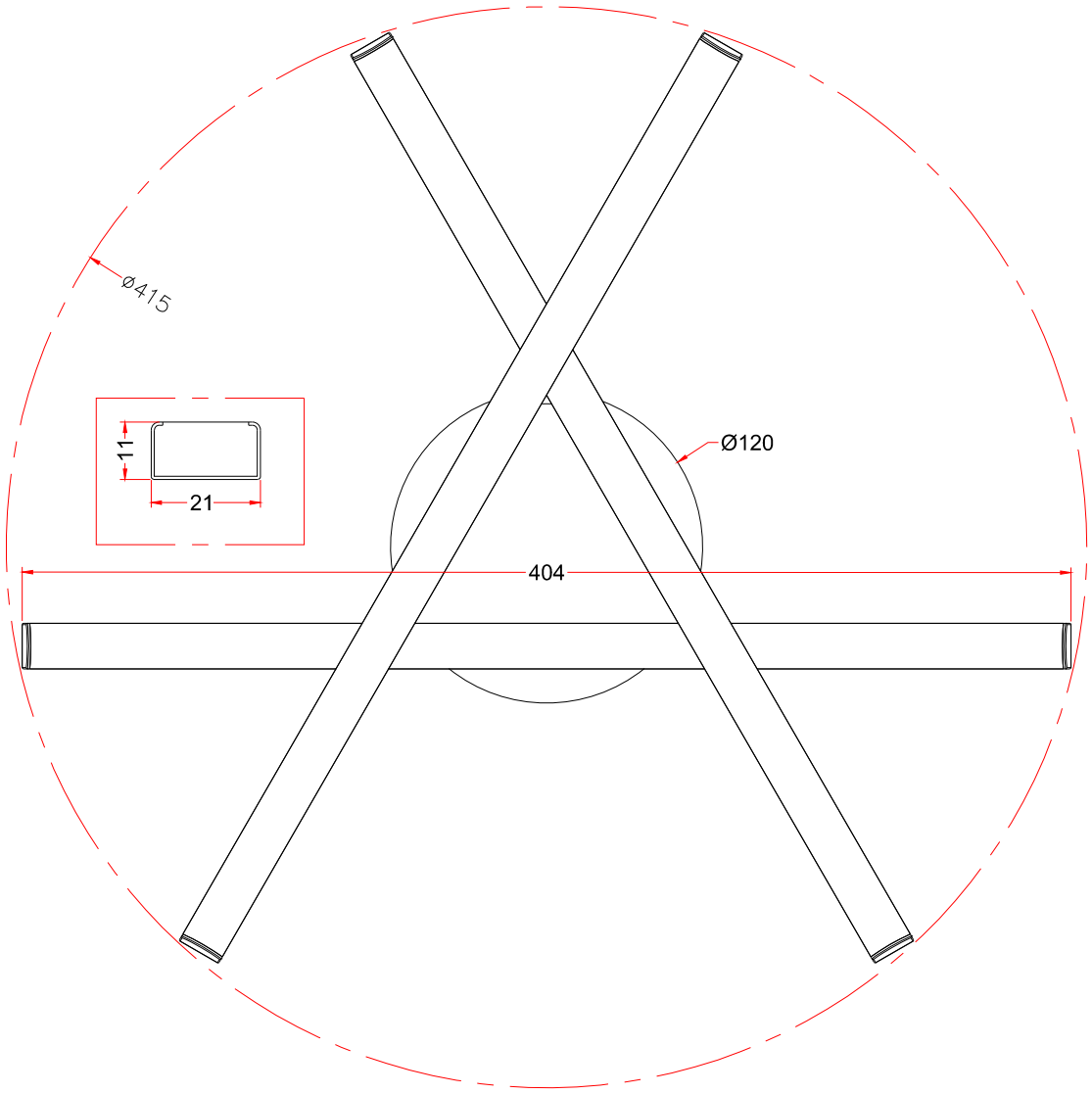

CERTIFICATION

IP20 240V UKCA dim

CONTACT

www.firstchoicelighting.co.uk info@firstchoicelighting.co.uk