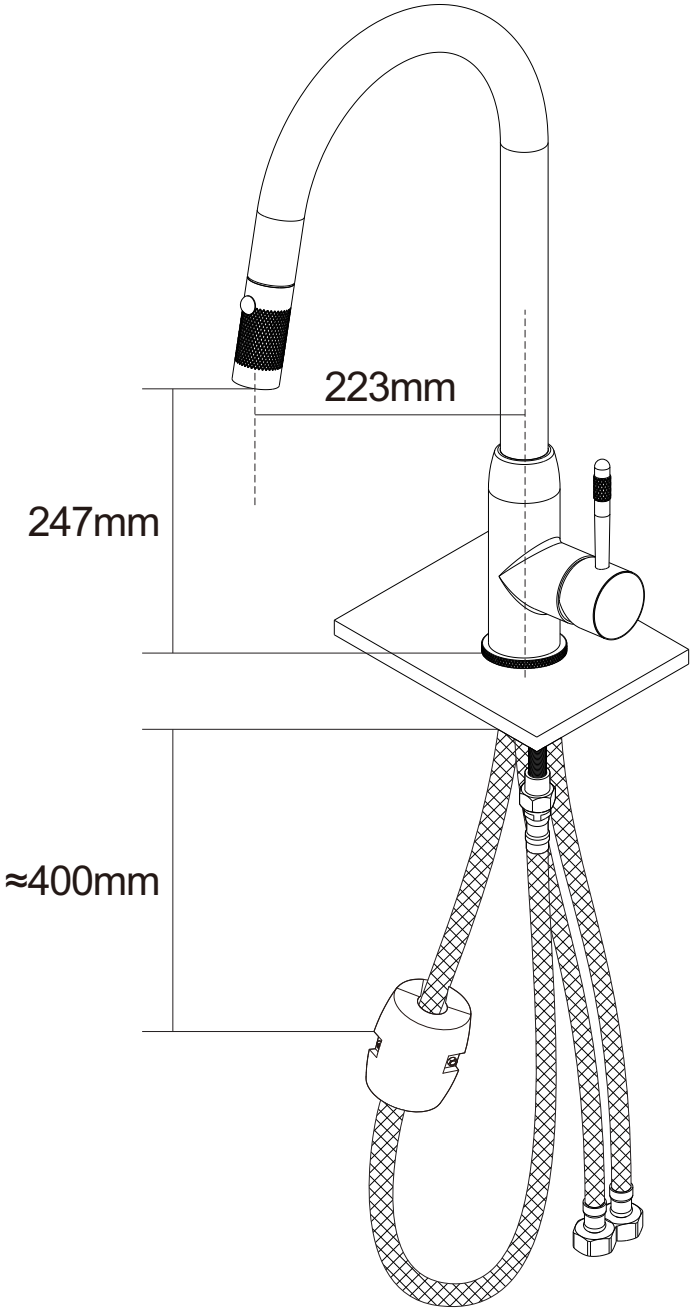

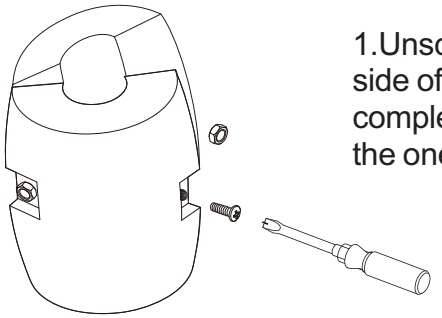

1.Unscrew the screw on one side of the gravity ball completely, and only loosen the one on the other side.
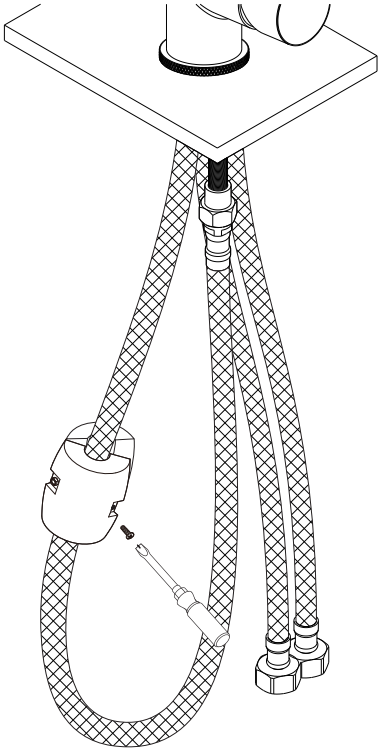
2.Install the gravity ball onto the telescopic tube and tighten all the screws securely.