ASSEMBLY INSTRUCTION

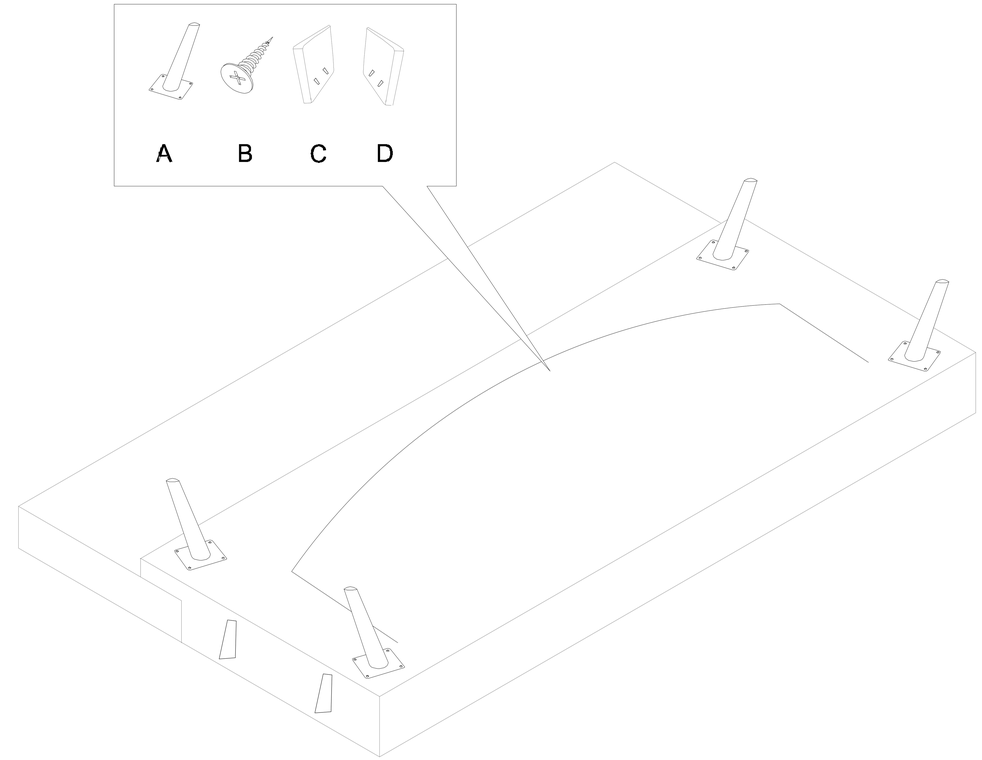

1

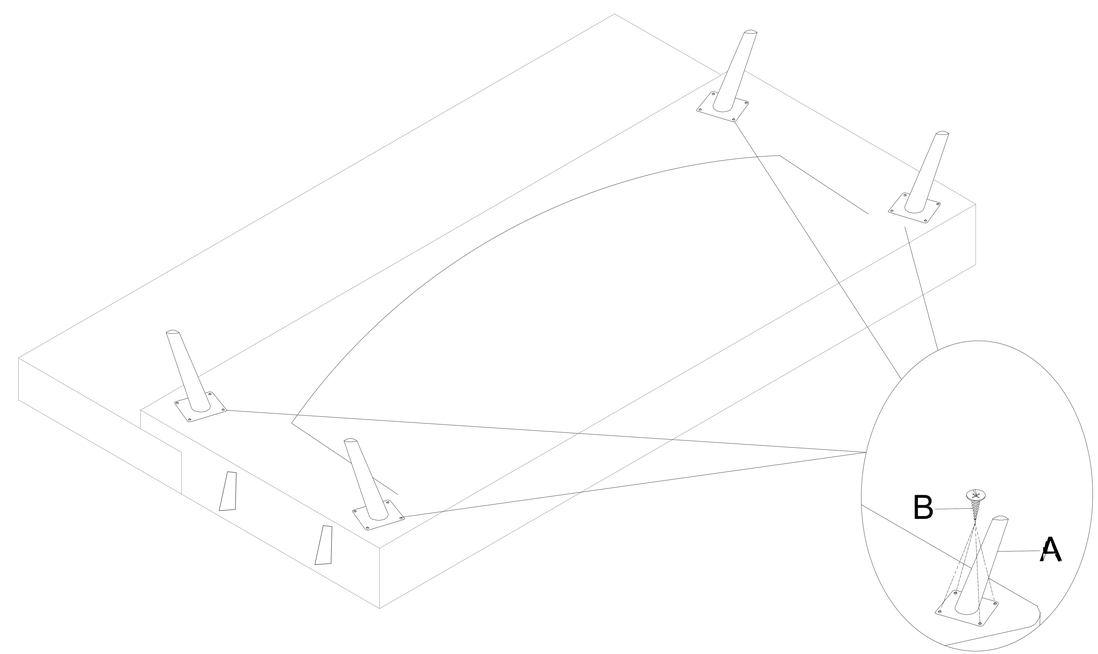

ACCESSORLES					
QUANTITY	1PC	A 4PCS	B 16PCS	C 1PC	D 1PC

2

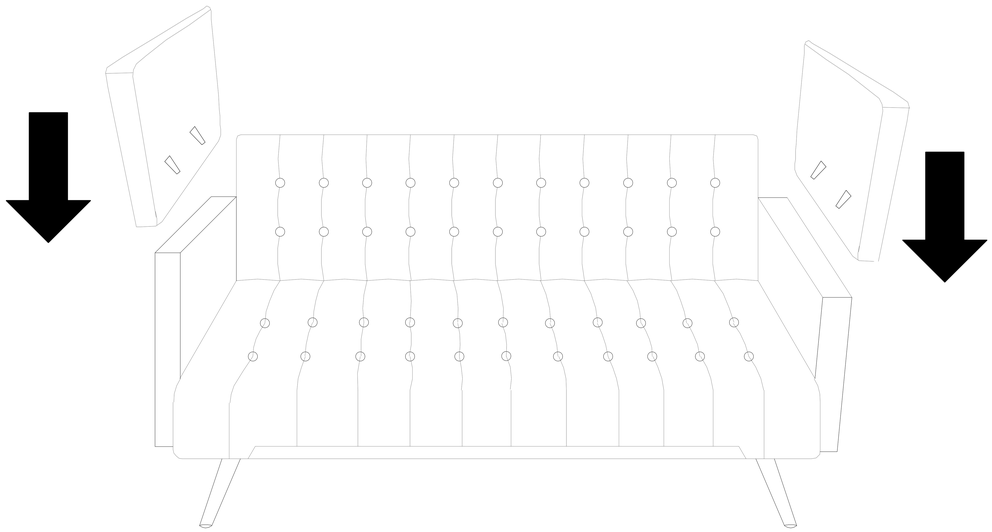

3

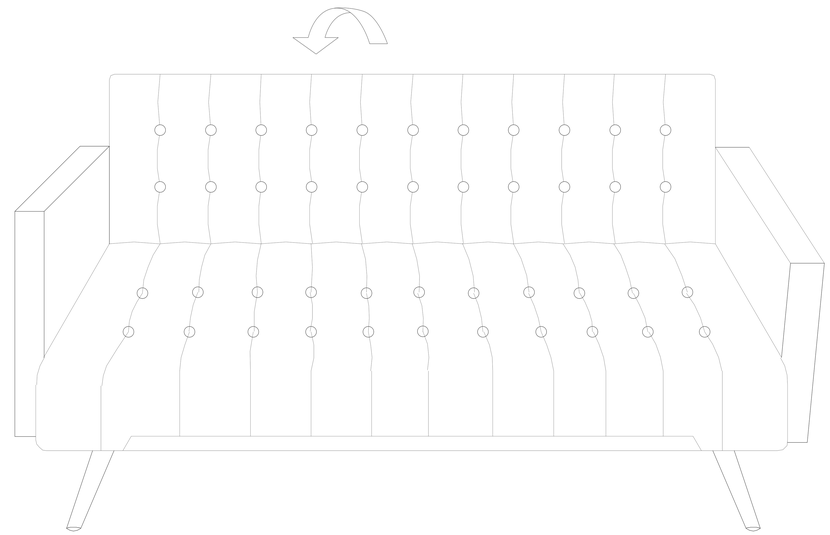
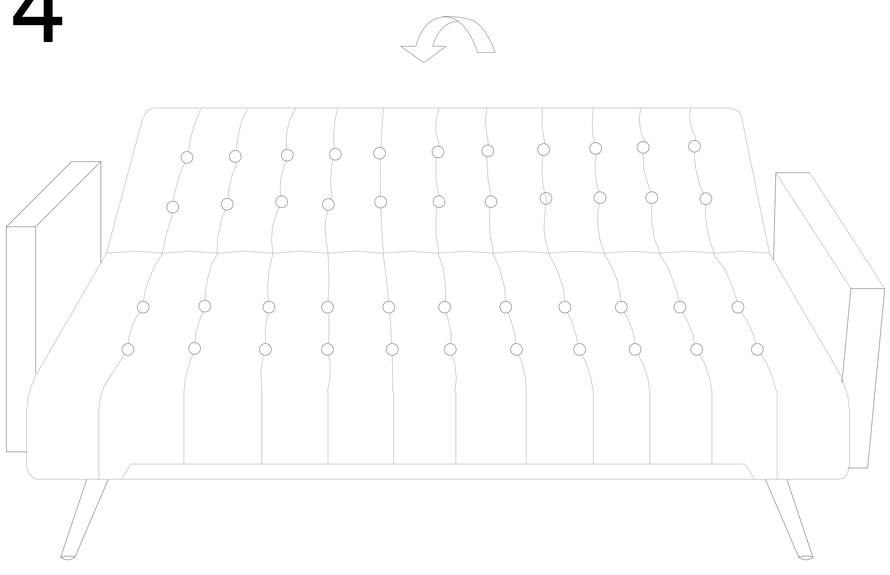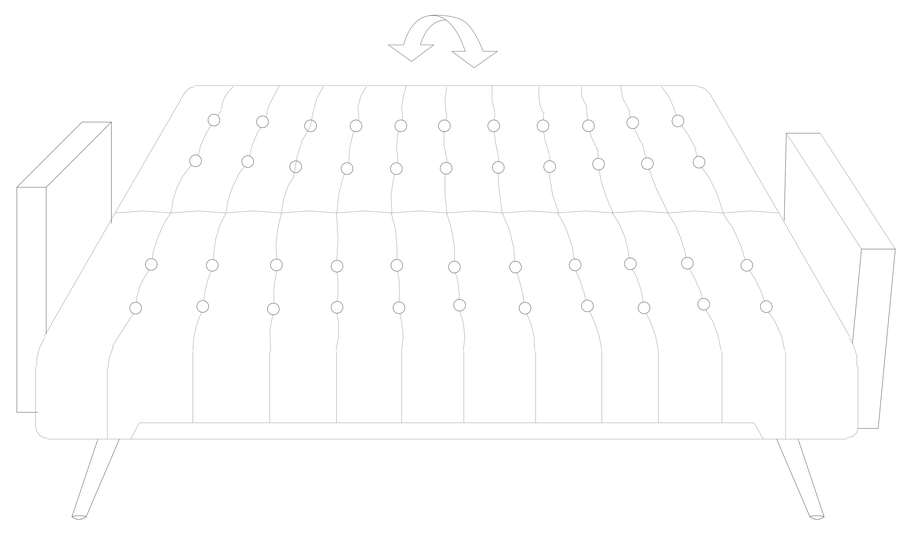
4