SuperHandy®

Walk Behind Leaf Vacuum and Chipper | GBOS017

Operator's Manual

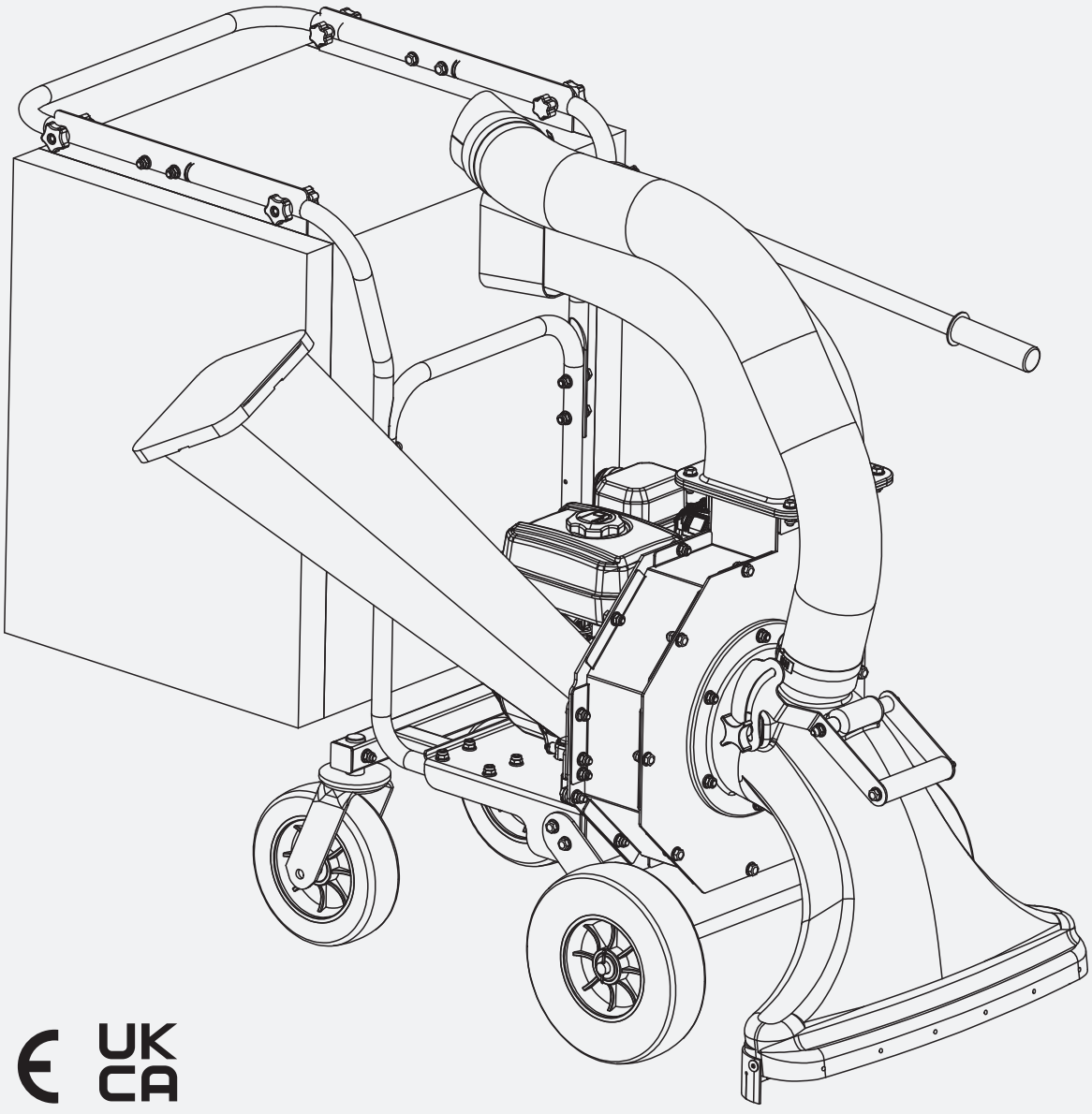

CE UKCA

Warning: Please read and thoroughly understand all instructions before operating. Failure to follow safety rules and other basic safety precautions may result in serious personal injury. Keep these instructions in a safe and easily accessible place so that they can be referred to when needed. Retain these instructions to assist in future servicing.

© SuperHandy All Rights Reserved | Version 1.0

INDEX

Safety Warnings & Statements ..... 3~4
Technical Specifications 5
Main Components 6
Recommended Tools 6
Part List ..... 7~8
Assembly ..... 9~14
Preparation 15
Engine Operation ..... 15~16
Leaf Vacuuming&leaf Shredding Function ..... 17~18
Maintenance and Storage 19-20
Transportation & Storage Requirements 20
Warranty 20
Trouble Shooting 21
Exploded and Parts List 22

Safety Warnings & Statements

For your own safety and the safety of the product, please always follow these basic safety precautions when using this product.

General Precautions

1. Before use, you need to read and understand the product manual carefully to understand this product and its installation and operation methods.
2. The manual cannot describe all conditions or situations that may occur that may cause injury. The operator must understand the product or understand this user manual.
3. Never operate this product under the influence of alcohol or drugs.
4. If you are under 16 years old, do not operate this product.
5. When using this product, make sure there are no unauthorized persons nearby.
6. When unpacking and installing this product, use appropriate tools and wear gloves.
7. Please operate this product during the day or under good artificial light.
8. Never operate or install this product without reading or understanding the operator's manual.

Operation Precautions

1. Be very careful when loading or unloading the machine.
2. Please operate the machine carefully on the road or sidewalk.
3. Do not run the engine in an enclosed area where dangerous carbon monoxide fumes can collect.
4. When starting or operating the machine, make sure that the machine is on level ground and never lean directly over the machine.
5. Be sure the area is clear of other people before operating. Stop the unit if anyone enters the area.
6. When the machine is running, do not put your hands near the vacuum suction and discharge chute.
7. Operate the machine only in daylight or good artificial light.
8. Do not operate the unit while under the influence of alcohol or drugs.
9. Always wear eye and ear protection, anti-dust mask when operating this unit.
10. Keep in mind the operator is responsible for accidents occurring to other people or property.
11. Never operate the machine without proper guards, plates, or other safety protective devices in place.
12. Thoroughly inspect where machine is to be used and remove all foreign objects. And check the terrain to determine how to perform safely.
13. We suggest do not work on the slope as possible, especially in downhill, be sure to operate carefully and slowly.

Product Specific Safety

⚠ DANGER

The chipper shredder has spinning blades that can amputate hands and feet. Do not place hands or feet in the hopper or chipper cone, or discharge chute.

- Always wear protective goggles and do not operate the unit without the debris bag in place, as it discharges debris at high speeds.
- Do not allow anyone in the area while the unit is running, and if someone enters, shut the unit off immediately until they leave.
- Organize the work area before starting work.
- Never leave the machine running unattended; always turn off the engine, wait for the rotor to stop, and disconnect the spark plug.
- Always stand to the side of the chipper cone when feeding tree limbs, keep hands out of the chipper cone and shredder hopper, and avoid directing discharge material towards anyone.
- Keep the machine clear of material buildup, do not attempt to move it while running, and inspect for any signs of damage or foreign objects before operation.
- Use only approved attachments and accessories, ensure the machine is free of debris before starting, and stop the engine and inspect for damage if a foreign object is struck.

Disclaimer

Please read and understand all instructions carefully before operating this equipment. Only strictly observe safety precautions and other basic safety precautions before operating this equipment. Our company is not responsible for personal injury or property damage caused by human factors or abnormal use.

Main Purpose

The unit is a gasoline engine powered that can be used to suck up and pulverize

Technical Specifications

SKU#	**GBOS017**
Impeller Diameter	355 mm (14")
Vacuum Snout Size	600x120 mm (23.6"x4.7")
Collection Bag	175 L (6 cu.ft)
Leaf Reduction	10:1
Chipping Capacity	50 mm (Max. 2")
Chipping Knives	2 pcs
Reduction Rate	15:1
Wheel Size	Front wheel 255 mm (10"), Back wheel 200 mm (8")
Wheel Type	Pneumatic tires
Assembled Dimension	1450x700x1100 mm (57"x27.6"x43.3")
Net / Gross Weight	57.6 kg (127 lb) / 71.2kg (157 lb)

Engine Specifications

Engine Type	OHV
Displacement	196cc
Starting	Recoil
RPM	3600
Fuel Capacity	3.3 L (0.9 Gal.)
Oil Capacity	0.5 L (0.13 Gal.)
Oil	10W-30

Main Components

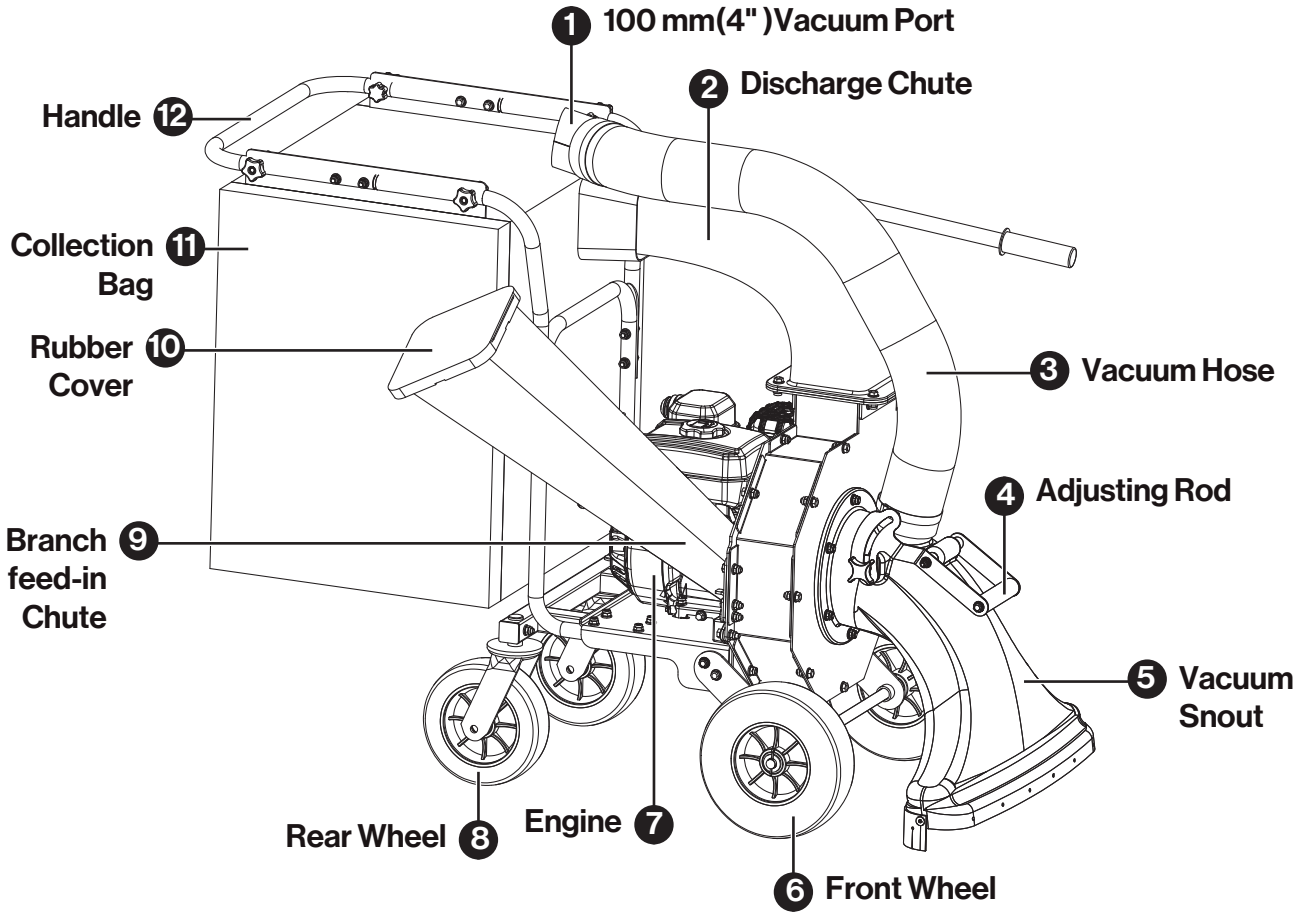

Recommended Tools



12mm Open-end Wrench x1pc
13mm Open-end Wrench x1pc



Slotted Screwdriver x 1pc



Phillips Screwdriver x 1pc

Part List

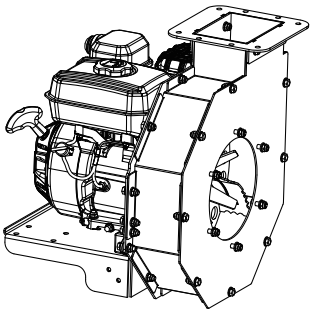

1. Engine Assembly Kit

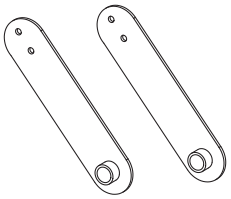

2. Wheels Fixing Plate

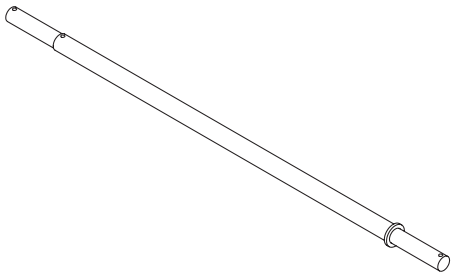

3. Wheel Axle

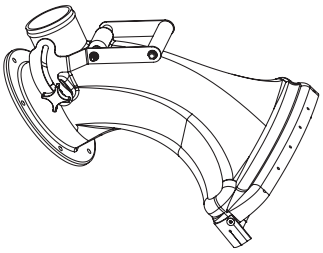

4. Vacuum Snout Kit

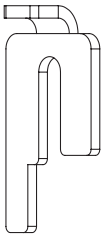

5. Inserts

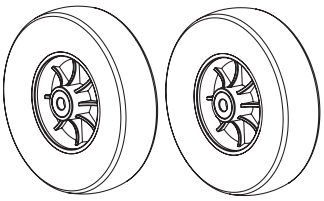

6. Front Wheels x2

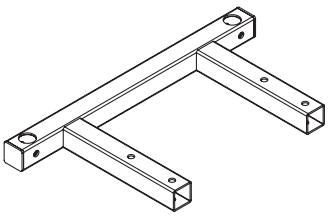

7. Wheel Bracket Kit

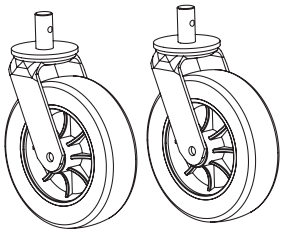

8. Swivel Wheels x2

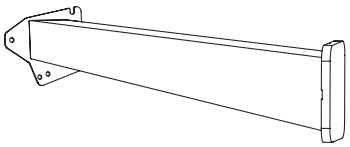

9. Feed-in Chute Kit

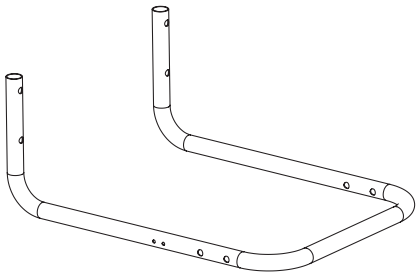

10. Lower Handle-bar

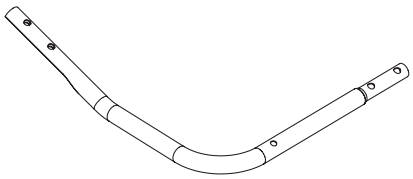

11. Left Connecting Bar

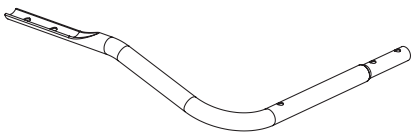

12. Right Connecting Bar

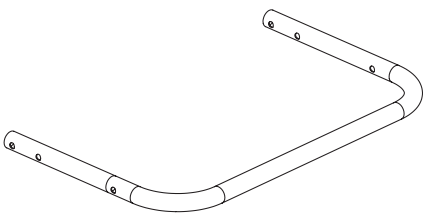

13. Upper Handle-bar

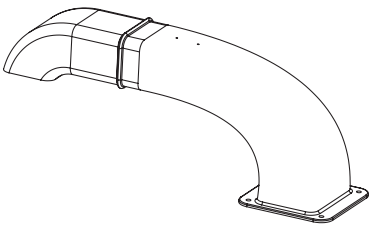

14. Discharging Chute

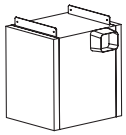

15. Collecting Bag

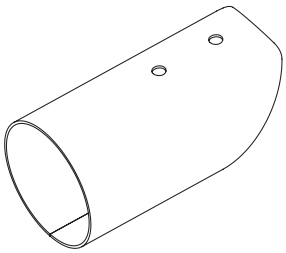

16. Metal Vacuum Port



17. Handle Bar

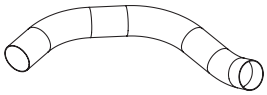

18. Hose

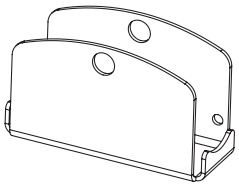

19. Clamp Base



1. Screw x2pcs

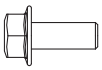

2. M8x20 Bolt x4pcs

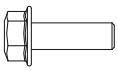

3. M8x25 Bolt x4pcs



4. M8x40 Bolt x10pcs



5. M8x45 Bolt x4pcs

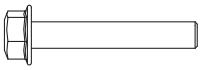

6. M8x50 Bolt x6pcs

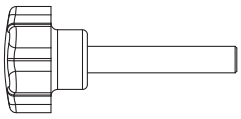

7. M8x45 Star-shape Bolt x4pcs



8. M8 Nut x36pcs



9. M8 Star-shape Nut x4pcs

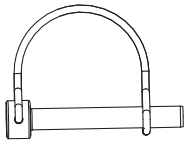

10. D-pin x1pc

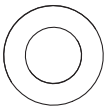

11. φ20 Flat Washer x3pcs



12. Cotter Pin x3pcs

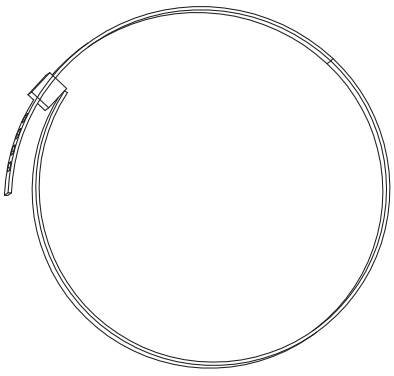

13. Hose Clamp x2pcs

Assembly

Assemble the Swivel Wheels

a) Use 4 M8x50 bolts and 4 M8 nuts to install the wheel bracket kit to the engine assembly kit.

b) Use 2 M8x50 bolts and 2 M8 nuts to install the 2 swivel wheels to the wheel bracket kit. **(Fig.01)**

Fig. 01

Recommended Tools:
12mm Open-end wrench x 1pc
13mm Open-end wrench x 1pc

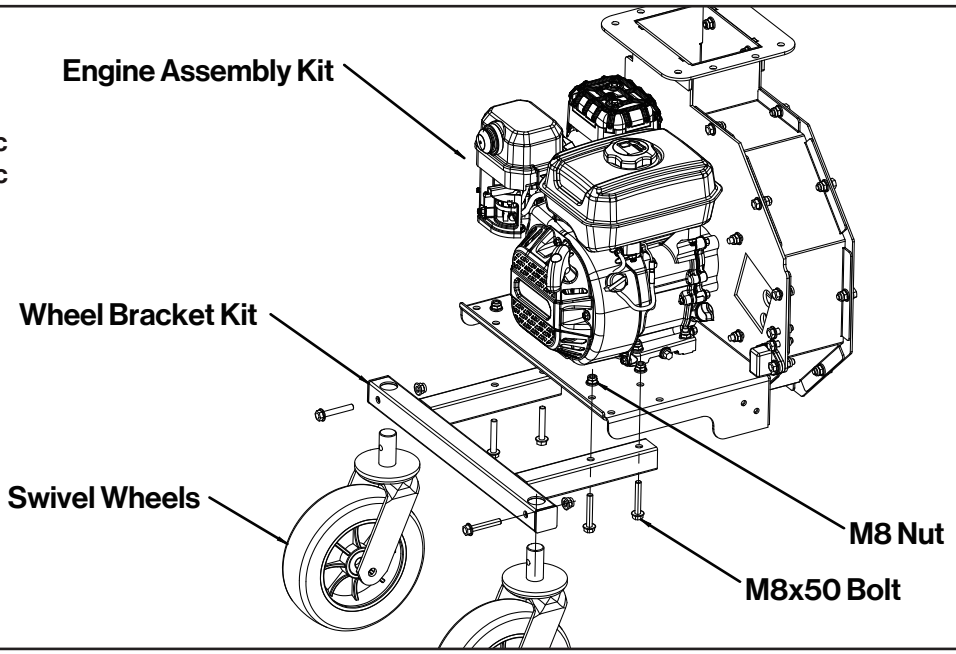

Assemble the Front Wheels

a) Install the 2 wheels fixing plate to the engine assembly kit, fixing by 4 M8x20 bolts and 4 M8 nuts.

b) Pass the wheel axle through the wheels fixing plate, and fixing them with 1 cotter pin and 1 ϕ 20 flat washer as shown. Bend the cotter pin to fix.

c) Install 2 front wheels on both sides of the wheel axle, and fixing them with 2 cotter pins and 2 ϕ 20 flat washers. Bend the cotter pin to fix. **(Fig.02)**

Fig. 02

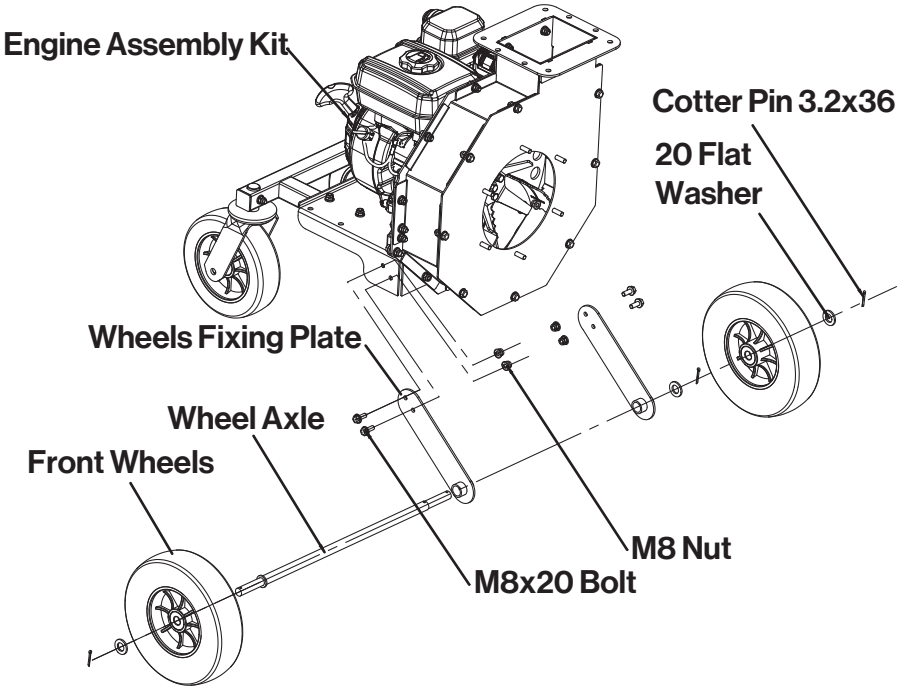

Assemble the Vacuum Snout Kit

Install the vacuum snout kit at the front of machine, fixing by 6 M8 bolts. **(Fig.03)**

Fig. 03

Recommended Tools:
13mm Open-end wrench x 1pc

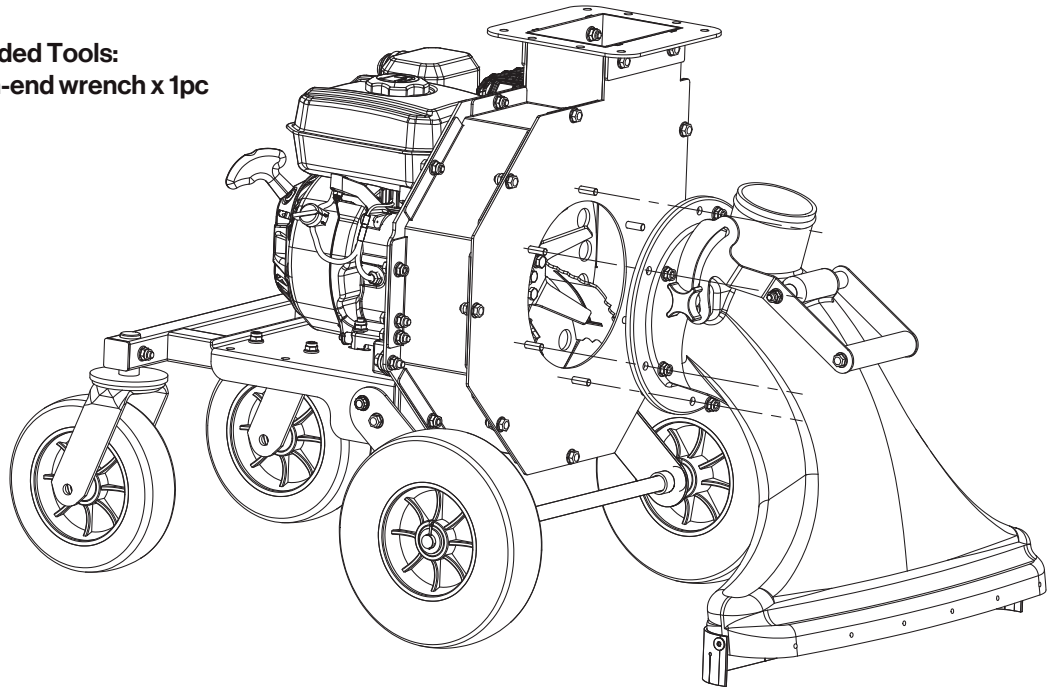

Assemble the Feed-in Chute Kit

a) Loosen and remove the 1 M8x25 bolt and 2 M8x30 bolt and 3 M8 nut from the housing as shown. **(Fig.04)**

Fig. 04
Recommended Tools:
12mm Open-end wrench x 1pc
13mm Open-end wrench x 1pc

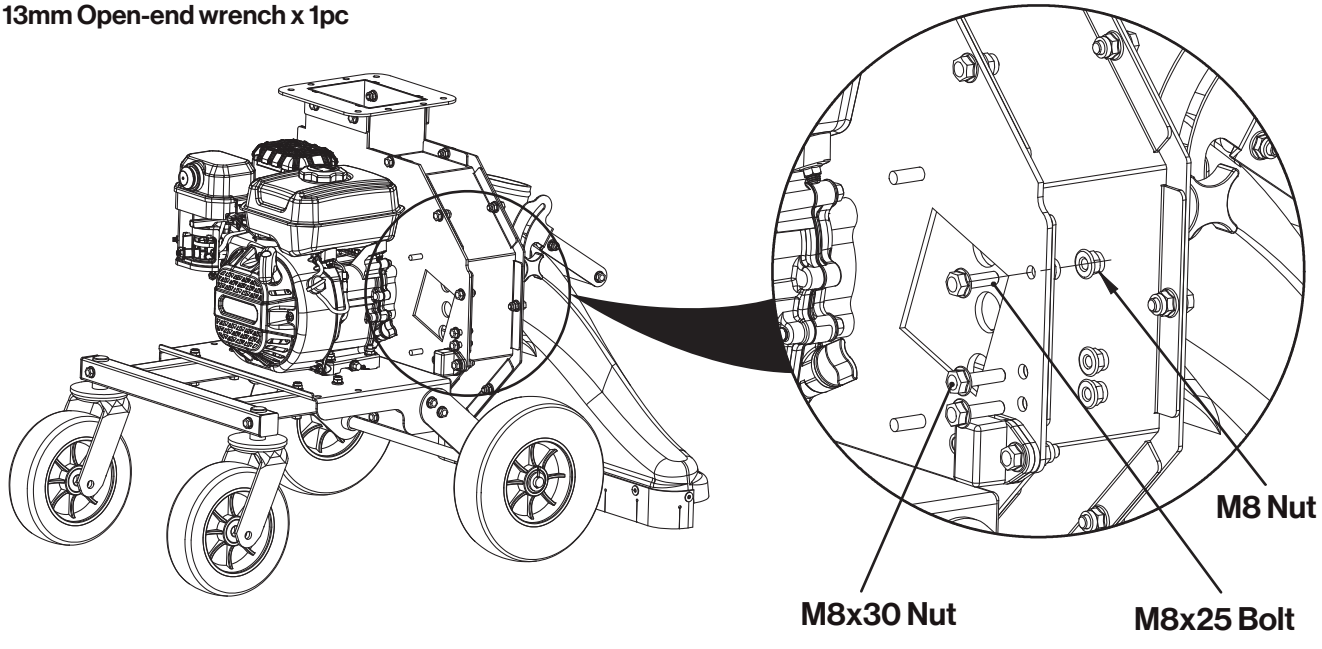

b) Install the feed-in chute kit to the housing, fixed by the 1 M8x25 bolt and 1 M8 nut that were just removed, and another two M8 nuts. **(Fig.05)**

Note: DO NOT forget to take out other parts that are packed inside feed-in chute when delivery.

Fig. 05

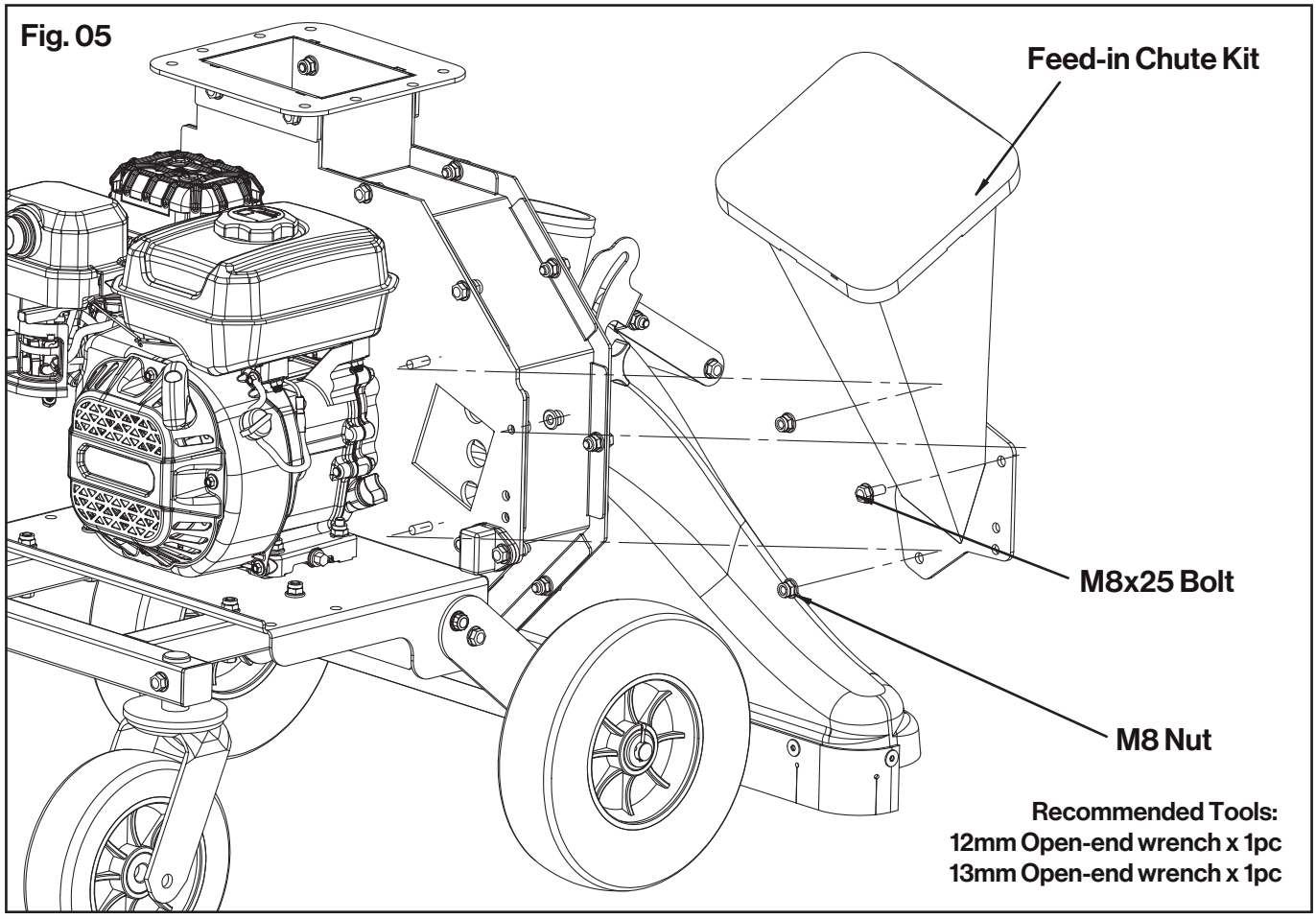

Recommended Tools:
12mm Open-end wrench x 1pc
13mm Open-end wrench x 1pc

c) Insert the inserts into the microswitches and fix it with 2 M8*30 bolts and 2 M8 nuts that were removed earlier. **(Fig.06)**

Fig. 06

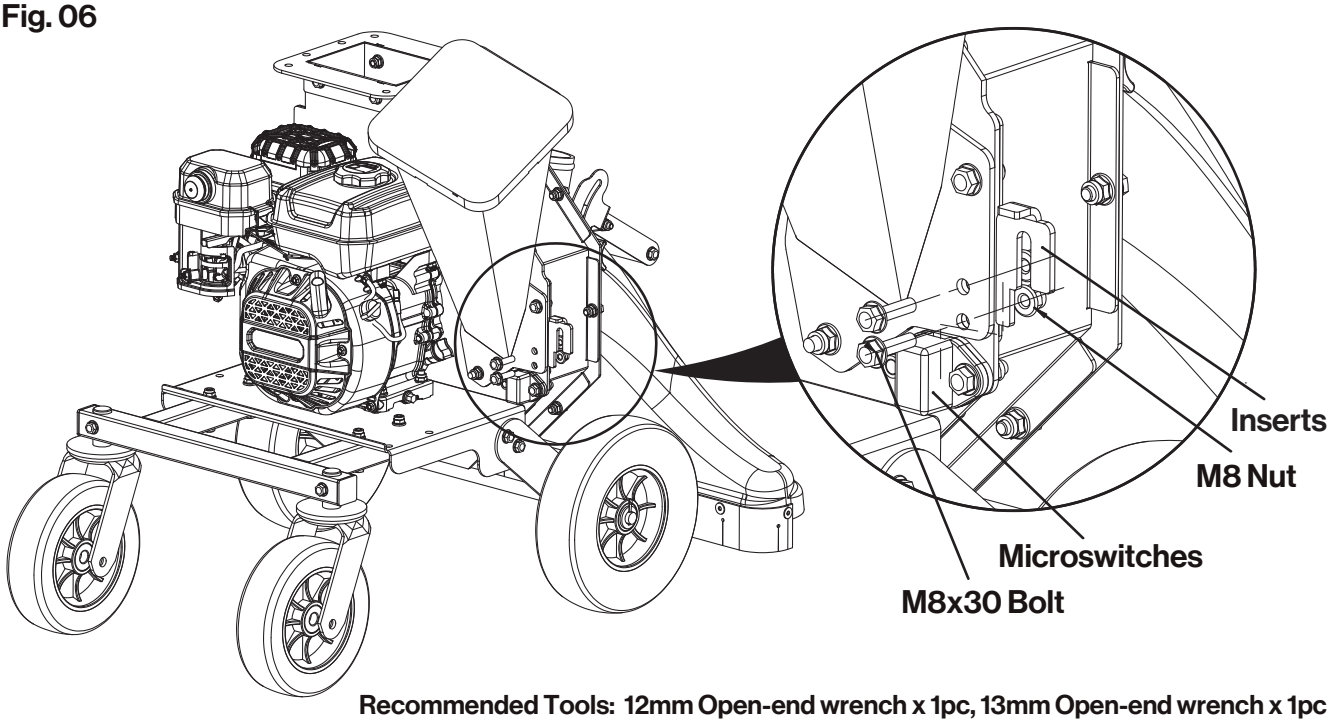

Recommended Tools: 12mm Open-end wrench x 1pc, 13mm Open-end wrench x 1pc

Assemble the Handle-bar

a) Install the lower handle-bar to the base of the unit, fixing by 4 M8x40 bolts, 4 M8 nuts. **(Fig.07)**

Fig. 07

Recommended Tools:
12mm Open-end wrench x 1pcm
13mm Open-end wrench x 1pc

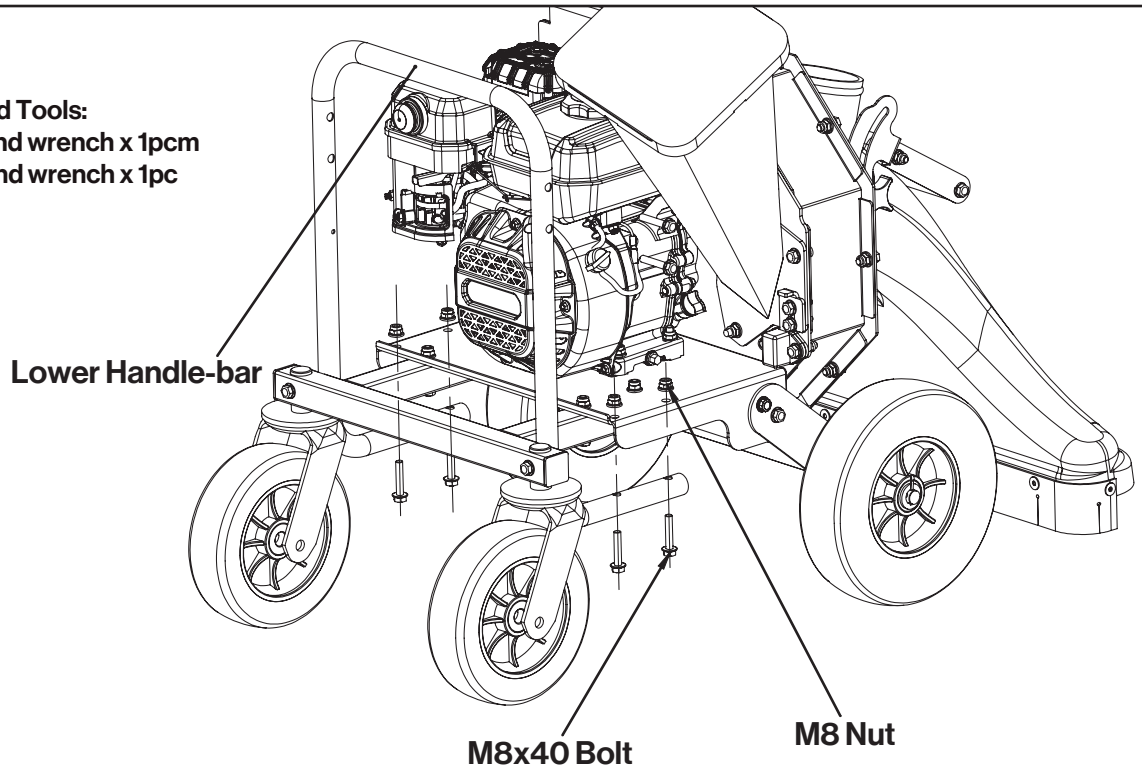

b) Install the left connecting bar and right connecting bar to the lower handle-bar, fixing by 4 M8x45 bolts and 4 M8 nuts.

c) Insert the upper handle-bar to the left and right connecting bars, fixing by 4 M8x40 bolts and 4 M8 nuts. **(Fig.08)**

Fig. 08

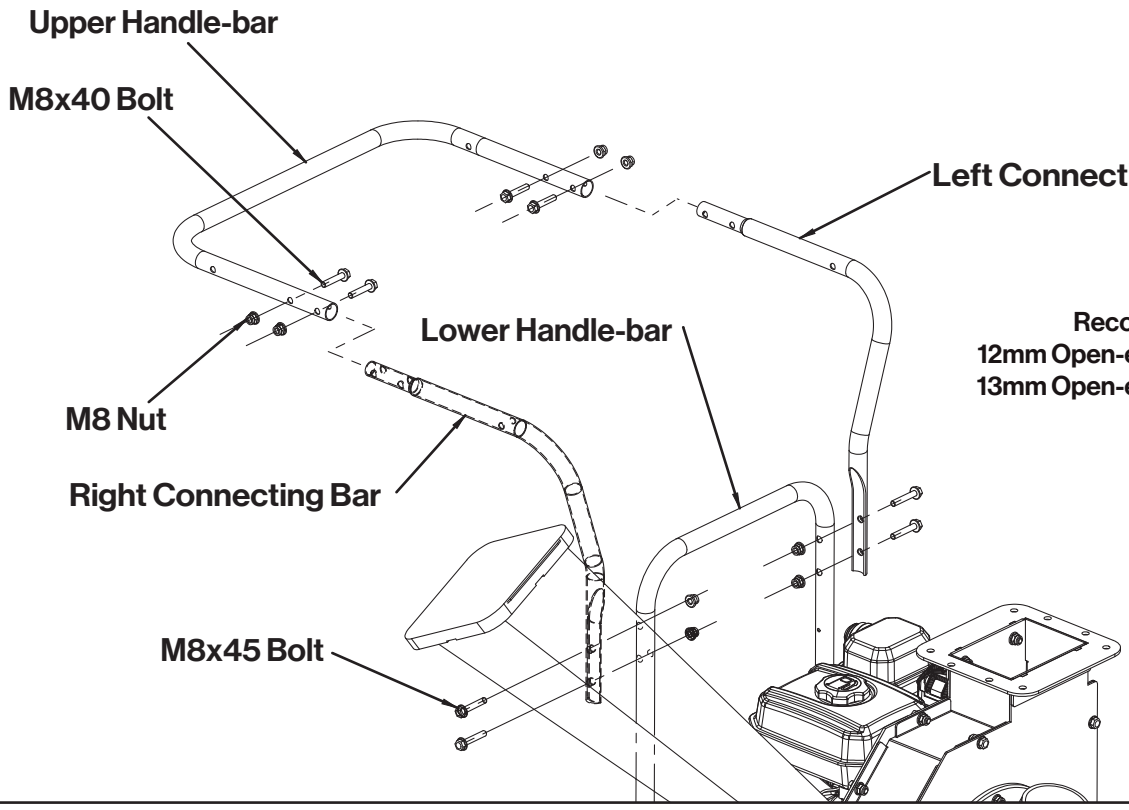

Recommended Tools
12mm Open-end wrench x 1pc
13mm Open-end wrench x 1pc

Assemble the Discharging Chute

a) Install the discharging chute at the top of machine, fixing by 4 M8x25 bolts and 4 M8 nuts as shown. **(Fig.09)**

b) Install the clamp base at top of discharging chute, fixing by 2 screws. Note that there are two pre-drilled holes at chute.

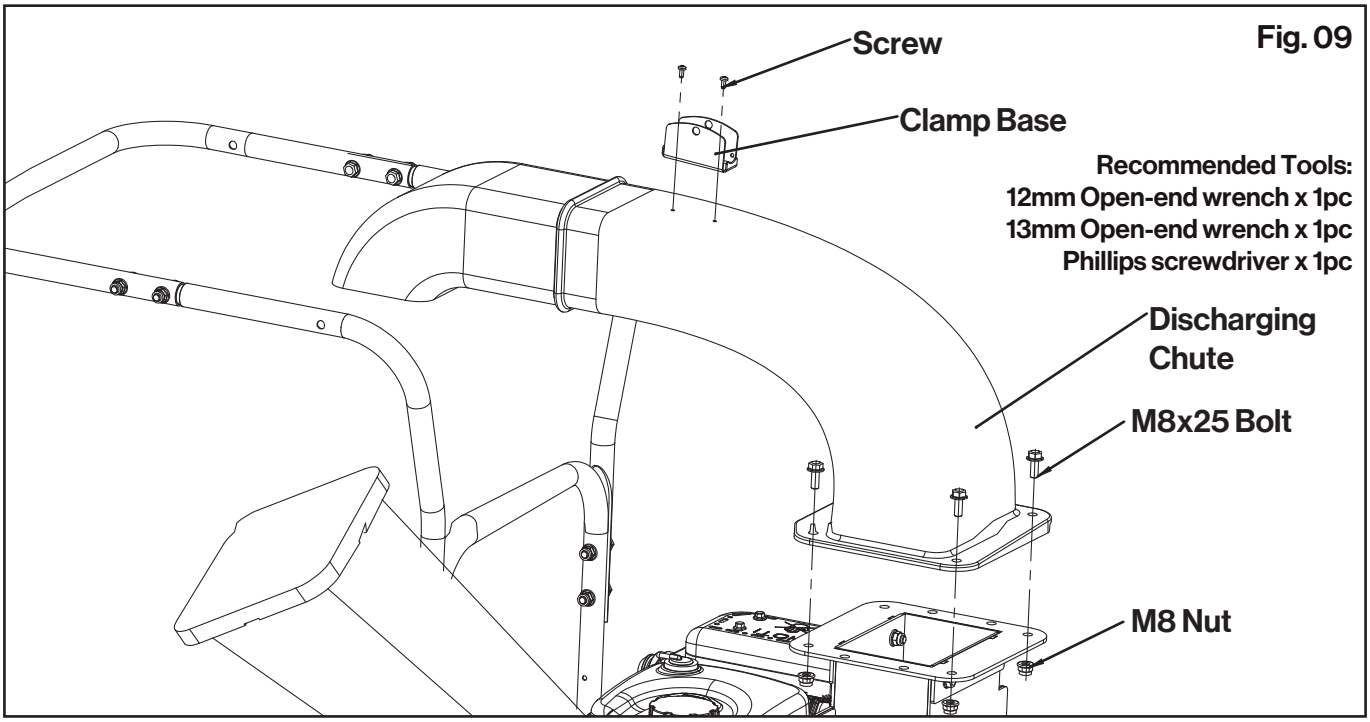

Assemble the Collection Bag

a) Place the collection port of the collection bag over the discharge port, fixing by the belt. **(Fig.10)**

b) Install the collection bag onto the handle-bar using the 4 Star-shape bolts and 4 Star-shape nuts.

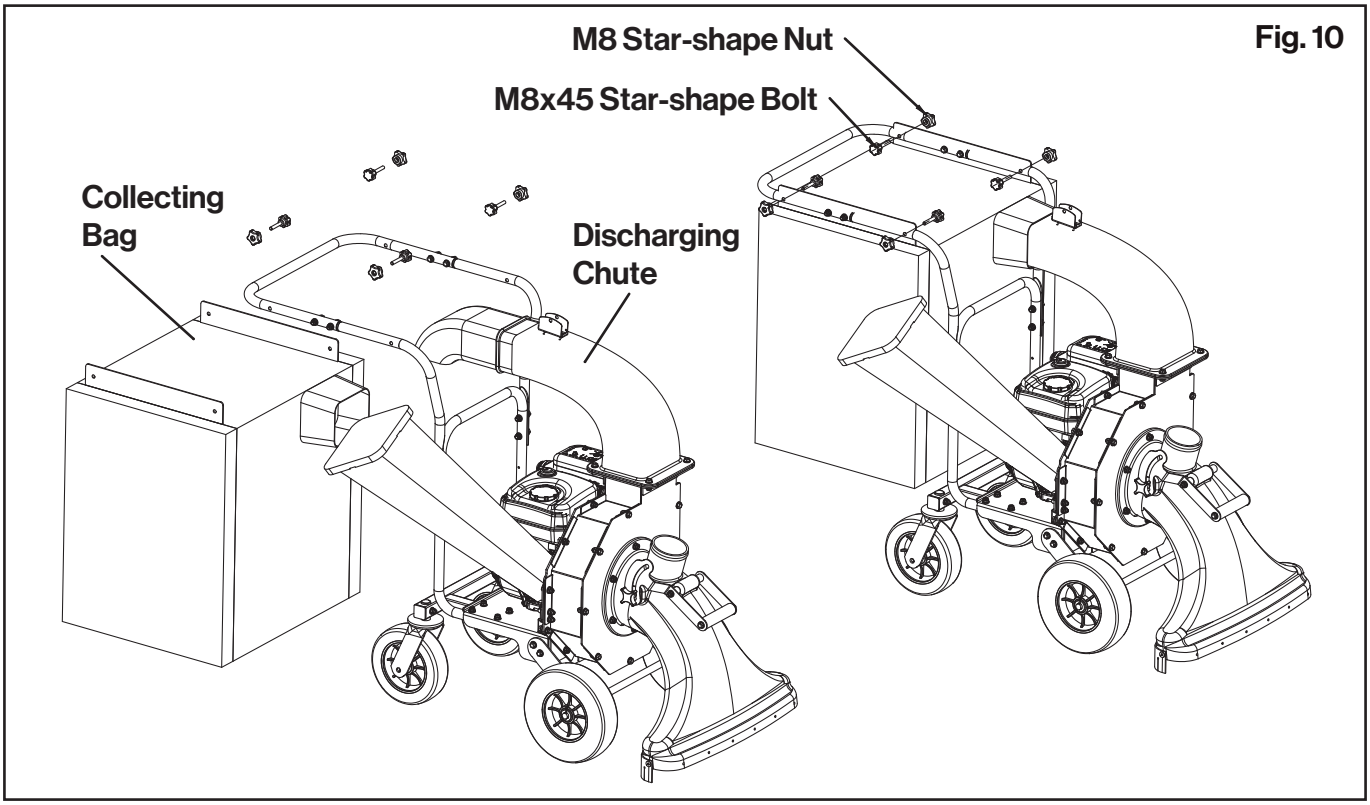

Assemble the Hose Kit

a) Connect the metal vacuum port to the hose, fixing by 1 hose clamp. Tighten the clamp by turning the screw of it.

b) Install the handle-bar to the metal vacuum port, fixing by 2 M8x40 bolts, 2 M8 nuts. **(Fig.11)**

Fig. 11

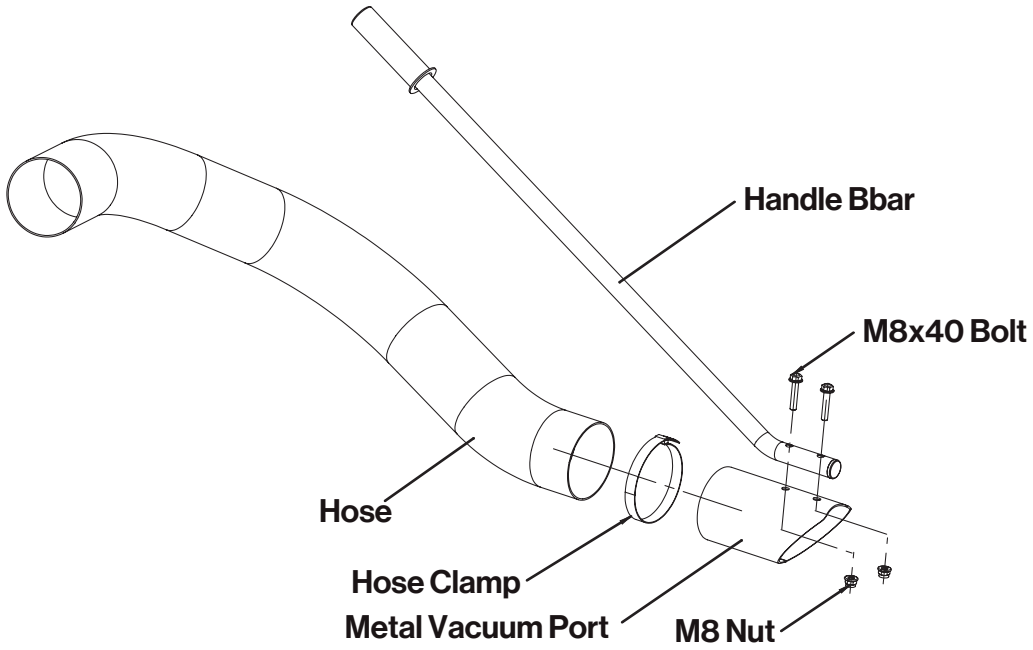

c) Install the other end of the hose onto the vacuum snout port, fixing by 1 hose clamp. Tighten the clamp by turning the screw of it.

d) Secure the handle-bar at the clamp base at top, secure it by 1 D-pin. **(Fig.12)**

Fig. 12

Recommended Tools
12mm Open-end wrench x 1pc
3mm Open-end wrench x 1pc
Slotted screwdriver x 1pc

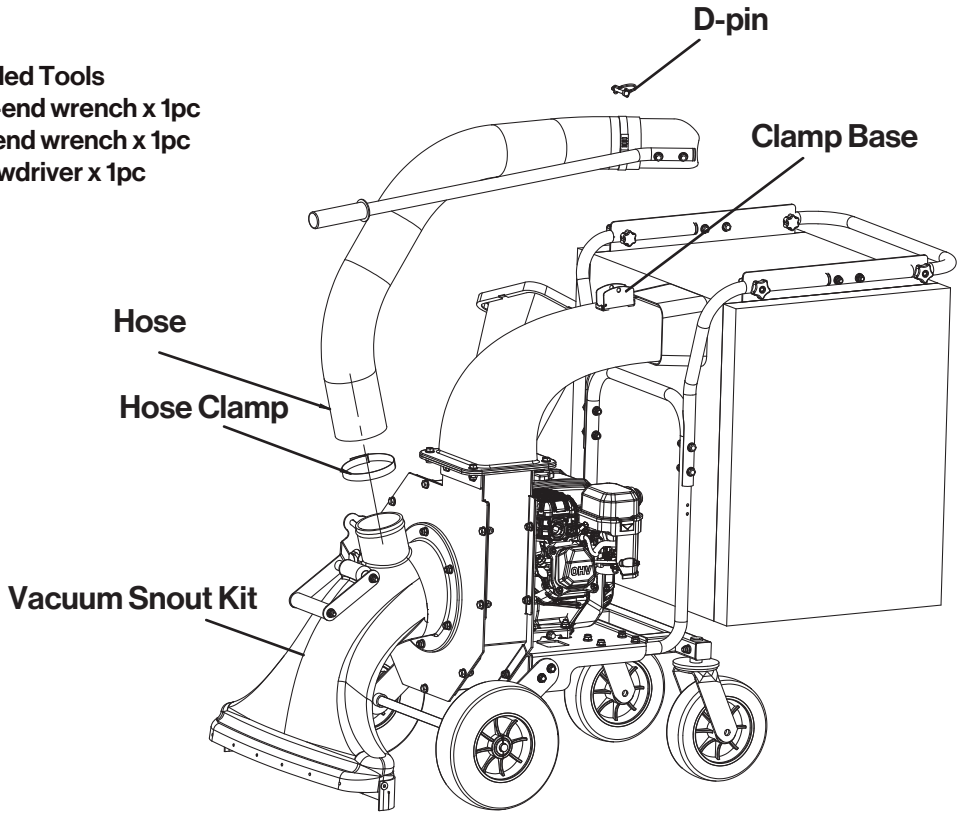

Preparation

1. Check that all bolts are not loose before operation.
2. Confirm that the tires are free of cracks, bulges, etc.
3. There is plenty of gasoline and oil in the engine.
4. Cutting function, the diameter of the wooden block is not more than two inches.

Engine Operation

⚠ WARNING

Before cleaning, repairing, or inspecting, shut off the engine and make certain that all moving parts have come to acomplete stop. Disconnect the spark plug wire and secure the wire away from the spark plug to prevent accidental starting.

Adding Fuel

Notice: The machine is shipped without fuel from the factory.

- Remove the fuel cap and fill the tank without overfilling.
- Leave room for fuel expansion as per the engine manual's recommendations.
- Hand tighten the fuel cap. Starting and Stopping the Engine.

Adding Oil

Notice: The machine is shipped without oil from the factory. Oil is a major factor affecting performance and service life.

Add engine oil according to the engine manual, and familiarize yourself with relevant knowledge and procedures.

Handle fuel with care; it is highly flammable.

1. Use an approved fuel container.
2. Never add fuel to a running engine or hot engine.
3. Fill fuel tank outdoors with extreme care. Never fill fuel tank indoors.
4. Before restarting the engine, please clean up spilled fuel before restarting.

Gasoline Fires and Handling Fuel Safely

Use extra care in handling gasoline and other fuels. They are flammable and vapors are explosive.

1. When storing extra fuel be sure that it is in an appropriate container and away from any fire hazards.
2. Prevent fire and explosion caused by static electric discharge. Use only nonmetal, portable fuel containers.
3. If necessary, the fuel in the engine tank should be discharged outdoors. The discharged fuel should be handled carefully and stored in professional non-metallic fuel containers. Please store the fuel tank in the area with good ventilation conditions. Do not store the fuel tank indoors.
4. Never remove the fuel cap or add fuel with the engine running. Stop engine and allow to cool before filling.
5. Do not smoke while refueling or operating engine.
6. Never drain fuel from the engine in an enclosed area.
7. Always wipe up excess (spilled) fuel from engine before starting. Clean up spilled fuel immediately. If fuel is spilled, do not start the engine.
8. Test the fuel cap for proper installation before starting and using engine.

9. Never siphon fuel by mouth to drain fuel tank.
10. Always have an adult fill the fuel tank and never allow children to fill the tank
11. Never allow an adult or anyone under the influence of drugs or alcohol to fill tank
12. When storing gasoline or machine with fuel in the tank, store away from furnaces, stoves, water heaters or other appliances that have a pilot light or other ignition source because they can ignite gasoline vapors.

Starting / Stopping the Engine

1. Follow the engine manual for starting and shutting down procedures. Ensure the engine is running at full throttle before operation. For engines with adjustable throttle, move it to the SLOW position, wait for the engine to run at a slow RPM, and then switch to STOP ENGINE as described in the manual. Stopping the engine is crucial to halt the rotor from turning. Tips for Starting, Interrupting Operation, and Shutdown
2. Start the engine as instructed in the manual, keeping hands and feet away from the vacuum suction or discharge chute. Do not adjust the engine governor settings or over speed it to avoid hazards.

Interrupting the Engine

1. Do not reposition the machine while it is running, as it may tip over and cause injury. Never leave the machine running unattended. Park the machine on flat ground, turn off the engine, and inspect for any signs of damage or foreign material if unusual noise or vibration occurs.
2. When not in use, always turn off the engine, wait for the impeller to stop, and disconnect the spark plug before moving the unit to a safe storage area. If equipped with a fuel valve, switch the throttle to low speed and shut down the fuel valve after the engine is stopped. Refer to the engine manual for specific shutdown details.

Prevention of Burns and Fires

1. Never remove the muffler guard from the engine.
2. Never touch the muffler guard because it is extremely hot and will cause severe burns.
3. Never touch parts of the engine that become hot after operation.
4. Always keep materials and debris away from muffler guard and other hot parts of the engine to avoid fires.

Use Operation

This machine integrates three functions of leaf vacuuming, leaf shredding, and branch shredding, meeting your various usage needs.

Starting the engine, move the machine to the working area.

Leaf Vacuuming&leaf Shredding Function

Notice:

- When using the leaf vacuuming function, make sure to tightly cover the rubber cover, otherwise it will affect the efficiency of leaf vacuuming.
- The leaves will be automatically shredded and collected into the collection bag after vacuuming. Please remember to clean the collection bag promptly.

One is trolley working type with suction and another is hose vacuum. You can chose to use suction vacuum or hose vacuum with different working area. **(Fig.13)**

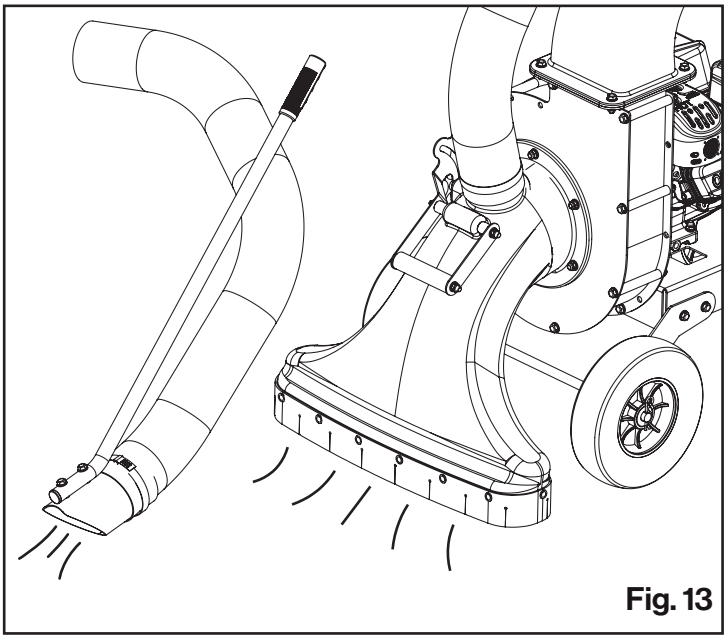

Fig. 13

Switch the vacuumizing working mode by adjusting rod. **(Fig.14)**

Suitable for vacuumizing items such as:

Leaves, garbage, twigs, seeds, sawdust, grass scraps, scrap paper, plastic and foam products.

Items to avoid sucking such as:

Articles that are too wet, crushed stone, hard metal, long fiber materials (plant vines, ropes, etc.)

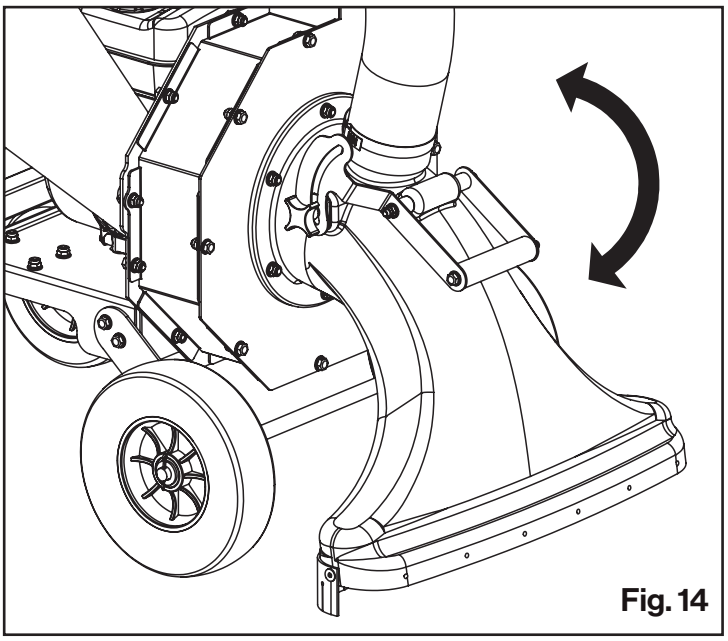

Fig. 14

Branch Shredding Function

Notice: When using the branch shredding function, remember to open the rubber cover.

1. Start the engine and feed the branches into the branch feeder to begin shredding. The shredded branches will be collected in the collection bag. (Max. branch diameter: 50mm (2")) **(Fig.15)**

Note:

- **Feed the thicker end of the branches downwards into the branch feeder to improve shredding efficiency.**
- **Please remember to clean the collection bag promptly.**

Fig. 15

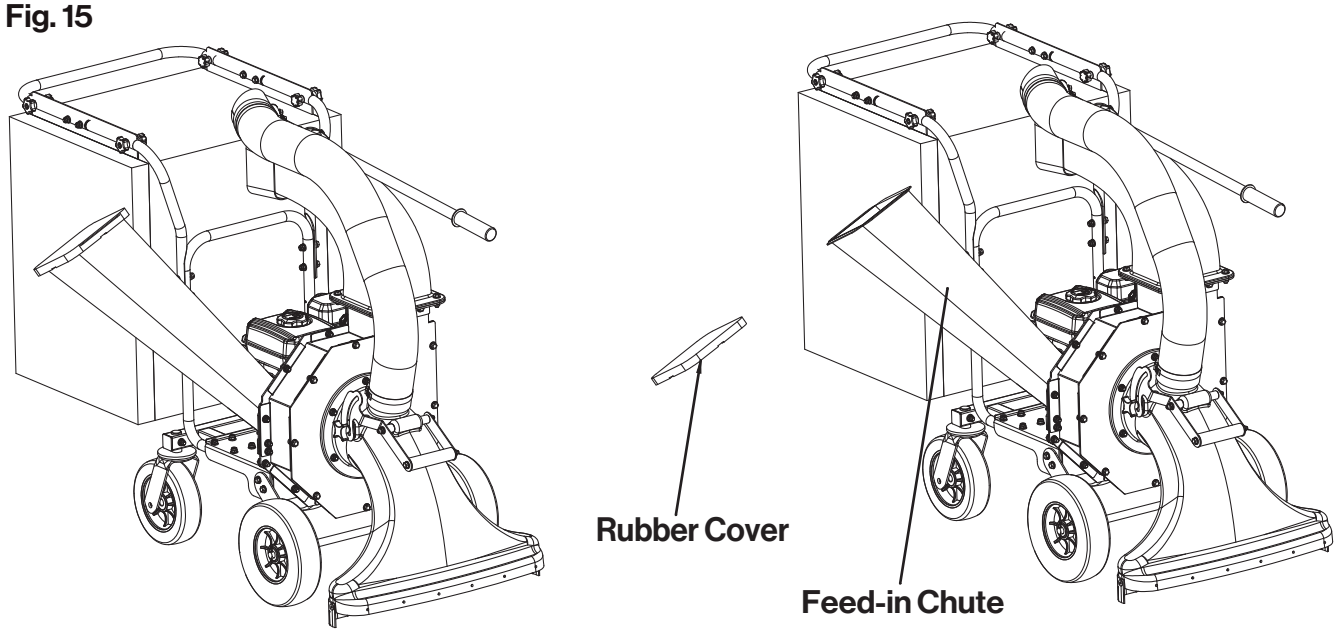

We suggest the user to clean the blockage in time, when the machine is not working smoothly, please check whether there is any blockage need to be cleaned, follow up the steps below:

Remove Blockage

After the operation of the machine or when it is necessary to remove the blockage:

1. Switch the throttle to slow level.
2. Turn the engine switch to the off position.
3. Turn off the fuel valve.
4. Disconnect the spark plug.
5. Remove the collection bag and suction hose and remove the blockage. (please put on gloves for operation)
6. Re-install the collection bag and suction hose.
7. Reconnect the spark plug.

The storage space of the collection bag is limited. We suggest that when the collection bag is near filled, or after each use, please clean the collection bag in time according to the following steps:

Empty the Collection Bag

1. Turn off the engine.
2. Move the machine to the unloading area.
3. Loosen the collection bag and the bolts,nuts on the handle to remove the collection bag.
4. Avoid dragging the collection bag to extend its service life.
5. Please empty the collection bag with tools.
6. Reconnect the bag to the device.

Maintenance and Storage

Schedule & Procedures

The following schedule should be followed for normal care of your unit.

SAFETY ITEMS	BEFORE EACH USE	EVERY 5 HOURS	EVERY 25 HOURS	EVERY 100 HOURS	EVERY 250 HOURS	SPRING & FALL
Check for loose hardware		X				X
Check all safety labels						X
Inspect cone, hopper, and guards	X					X
CHIPPER MAINTENANCE ITEMS						
Clean debris from engine and chipper	X					
Inspect/Rotate Shredding Hammers			X			
Inspect/Rotate Chipping Knives			X			

Engine Maintenance

Refer to the engine manual included in your package for information on engine maintenance. Your engine manual provides information and a maintenance schedule for performing the following tasks:

1. Always check oil level before starting engine. Refer to engine manual for capacity and type of oil to use.
2. Change oil after first 5-8 hours of operation. Change oil while engine is warm. Refill with new oil of recommended grade.
3. Check spark plug yearly or every 50 hours of operation.
4. Service air cleaner.
5. Keep engine and parts clean.
6. Check engine and equipment often for loose nuts and bolts, keep these items tightened.

Check for Loose Hardware

1. Service Interval: Every 5 hours; every spring and fall.
2. Inspect the unit, checking for loose hardware or components.
3. Pay special attention to the hardware attaching the chipper cone, hopper, axle, and front leg.

Inspect Cone, Hopper, & Guards

1. Service Interval: Every spring and fall.
2. Check that the chipper cone, shredder hopper, and discharge guards are in place, undamaged, and secure. Replace any damaged or missing parts.

Clean Debris from Engine & Chipper

1. Service Interval: Before each use and every 100 hours.
2. The engine requires air flow to cool itself and for combustion.
3. Before each use, clean any debris from the unit especially from around the air shroud intake, air filter, and muffler. Every 100 hours, remove the engine air shroud and clean out any debris from the engine cooling fins. We recommend having this service performed by an authorized dealer.

⚠ IMPORTANT

Engine is shipped from factory without oil. You must add engine oil before starting engine.

⚠ CAUTION

1. For the safety of the user, and to maximize the life of the engine, it is crucial to take time to check the condition of the engine.
2. Problems must be corrected before operating.
3. Avoid injury! Engine oil is hazardous to your health. Dispose of oil appropriately.
4. Use a safe disposal/recycling center.

Transportation & Storage Requirements

1. When storing the product, it must be placed in a cool, dry, dust-free place, away from direct sunlight and rain.
2. During product transportation, loading and unloading, it is strictly prohibited to throw, drop, toss, trample and other barbaric operations.

Warranty

Twelve (12) months for workmanship of the product, except for wearing parts. Warranty period starts from the product purchase date. Warranty covers material quality and workmanship only. Warranty does not cover product for issues caused by improper usage or any operation not in accordance with the specifications of this manual. Any modification or tampering with the product in any way voids the warranty.

Trouble Shooting

Issue	Possible Cause	Solution
Engine runs but no material is discharged.	1. Discharge chute clogged. 2. Engine not running at full speed.	1. Clean out debris. 2. Set throttle control to FAST if equipped.
Chipping action slow, or engine stalling.	1. Branch diameter is too thick. 2. Throttle set is too slow. 3. Tree limbs are extremely hard or dried out.	1. Do not process branches over 75 mm (3") diameter. 2. Adjust throttle to increase engine speed. 3. Material is not suitable for chipping.
Unusual noise or vibration when chipping material.	1. Rotor overloaded with material. 2. Hammers are broken, bent, or loose. 3. Hammers frozen in place.	1. Allow unit to clear itself before adding more material to the hopper. 2. Check assembly. Tighten or replace as necessary. 3. Check for obstructions and debris. Repair or replace as necessary.
Vacuum not working.	1. Hopper gate not closed. 2. Cone cover not installed. 3. Hose not attached properly. 4. Engine not running at full RPM.	1. Slide gate to closed position. 2. Allow material to dry. 3. Clear blockage or replace. 4. Set throttle control to FAST if equipped.

Exploded and Parts List

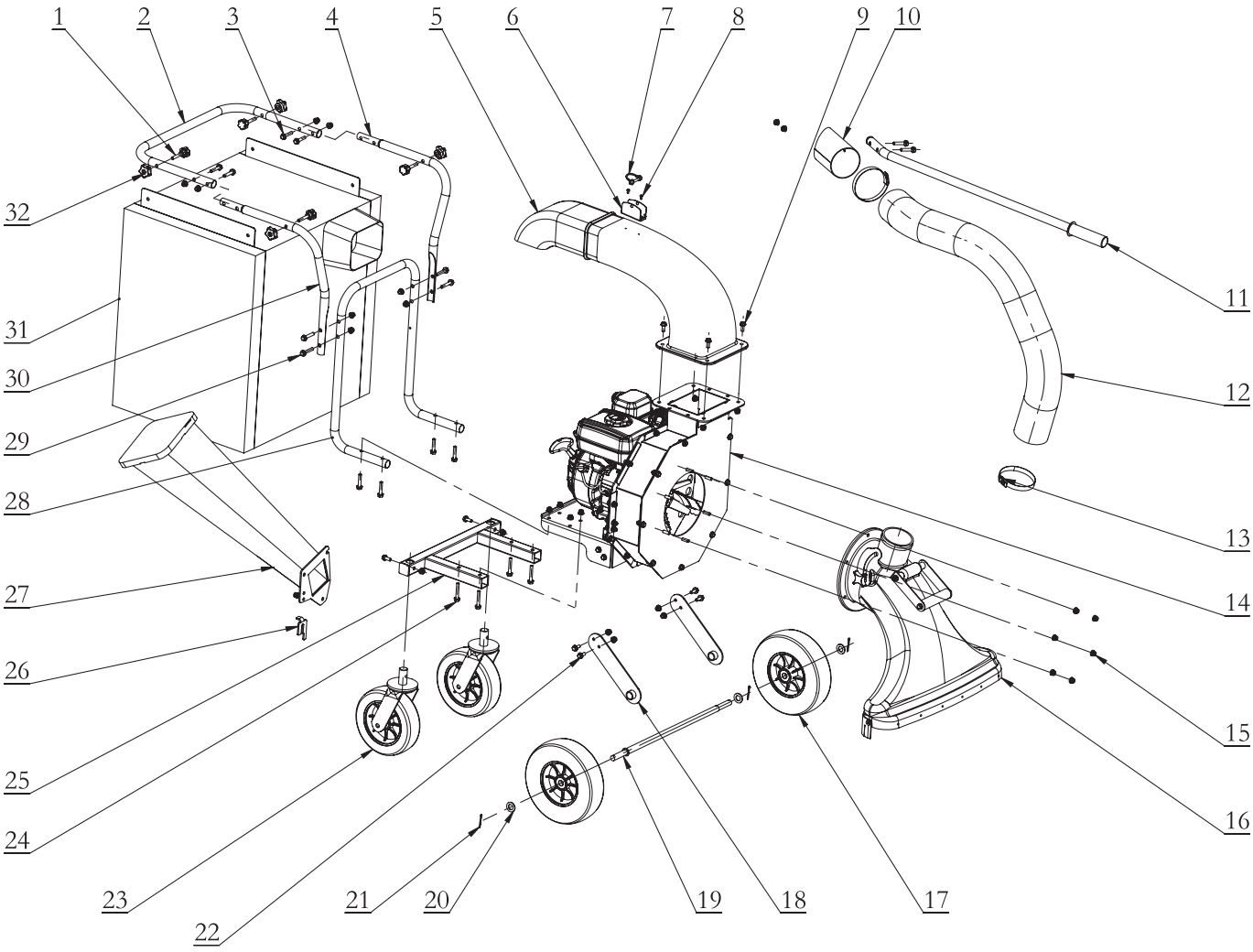

Part No.	Description	Q'ty	Part No.	Description	Q'ty
1	M8x45 Star-shape Bolt	4	17	Front Wheels	2
2	UpperHandle-bar	1	18	Wheels Fixing Plate	2
3	M8x40 Bolt	10	19	Wheel Axle	1
4	Right Connecting Bar	1	20	Ø20 Flat Washer	3
5	Discharging Chute	1	21	Cotter Pin	3
6	Clamp Base	1	22	M8x20 Bolt	4
7	D-pin	1	23	Swivel Wheels	2
8	Screw	2	24	M8x50 Nuts	6
9	M8x25 Bolt	4	25	M8x50 Bolt	1
10	Metal Vacuum Port	1	26	Inserts	1
11	Handle Bar	1	27	Feed-in Chute Kit	1
12	Hose	1	28	Lower Handle-bar	1
13	Hose Clamp	2	29	M8x45 Bolt	4
14	Engine Assembly Kit	1	30	Left Connecting Bar	1
15	M8 Nut	36	31	Collecting Bag	1
16	Vacuum Snout Kit	1	32	M8 Star-shape Nut	4

SuperHandy®

Great Circle USA
Email: service@greatcircleus.com
www.greatcircleuk.com
www.greatcirclede.com

Size: 210x285mm 128克双铜 REV 03/14/25 3020630