Vacmaster®

30L | 1400W
VDK1430SFC

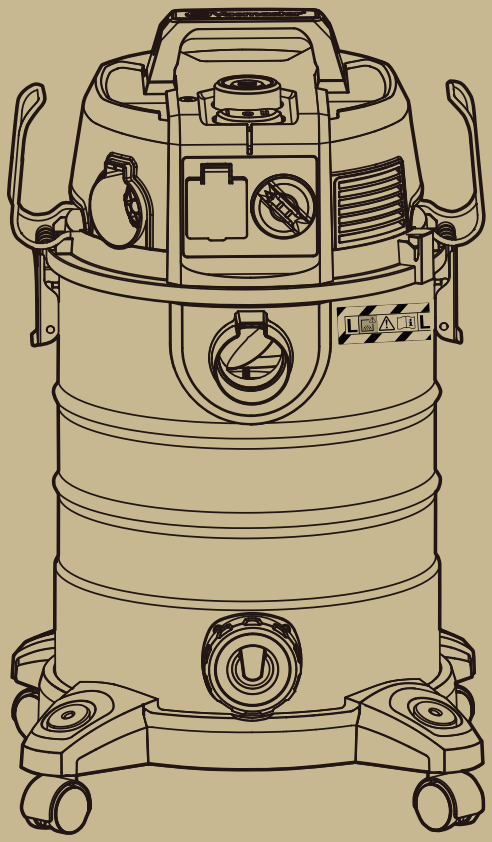

Original Instructions

IPX4

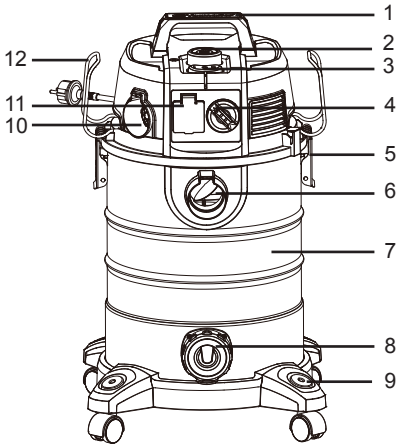
1
2
3
4
5
6
7
8
9
10
11
12

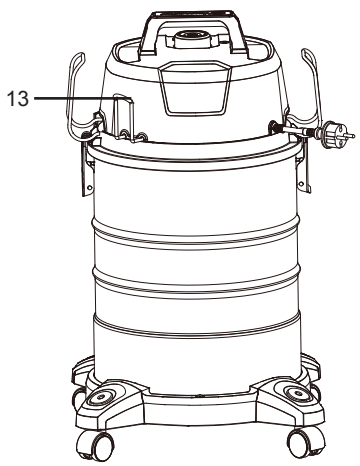
13

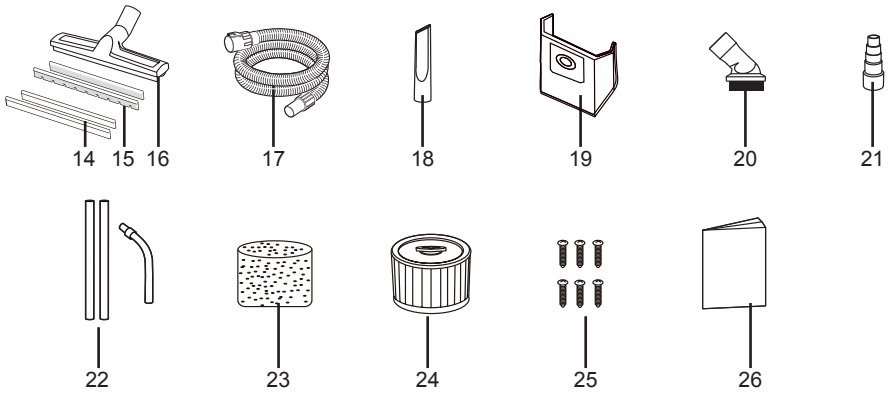
14
15
16
17
18
19
20
21
22
23
24
25
26

TABLE OF CONTENTS

SECTION **PAGE**

Symbols……6
Safety Information……7
Unpacking and Checking Carton Contents……9
Assembly……9
Operation……10
Maintenance……12
Troubleshooting……13
Technical Data……14
Recycling and Disposal……14
Plug/Fuse Replacement (UK & Ireland Only)……14

Thank you for purchasing this Vacmaster® wet and dry vacuum cleaner. Feel confident that with Vacmaster® you are obtaining a high quality product engineered for optimal performance. This vacuum cleaner is suitable for use with both liquids and dry materials.

FOR YOUR SAFETY: CAREFULLY READ AND UNDERSTAND ALL INSTRUCTIONS.

SYMBOLS

	Caution
	Read operator's manual.
	Vacuum cleaners of dust category L according to IEC/EN 60335-2-69 for **dry vacuuming** of materials with an exposition limit value > 1mg/m^3 that are hazardous to one's health.
	WARNING: The vacuum cleaner may contain materials that are hazardous to one's health. Have the emptying and maintenance, incl. the disposal of dust-collection container, carried out by a specialist. Appropriate protective equipment is required. Do not operate the vacuum cleaner without the complete filter system. Otherwise there is danger to your own health.

SAFETY INFORMATION

READ AND UNDERSTAND ALL INSTRUCTIONS BEFORE USING THIS VACUUM CLEANER.

This machine is intended for commercial use, for example in hotels, schools, hospitals, factories, shops, offices and rental businesses. Any other use is considered as improper use. The manufacturer accepts no liability for any damage resulting from improper use. The risk for such improper use is borne solely by the user.

When using the equipment, a few safety precautions must be observed to avoid injuries and damage. Please read the complete operating manual with due care. Keep this manual in a safe place so that the information is always available. If you give the equipment to any other person, give them these operating instructions as well. We cannot accept any liability for damage or accidents which arise due to a failure to follow these instructions and the safety information.

- Never leave the appliance switched on unattended, if you leave the work area, switch the appliance off or unplug it from the power supply.
- Do not vacuum or use this vacuum cleaner near flammable liquids, gases or explosive vapours like gasoline or other fuels, lighter fluids, cleaners, oil-based paints, natural gas, hydrogen, or explosive dusts like coal dust, magnesium dust, grain dust or gun power. Sparks inside the motor can ignite flammable vapours or dust.
- This vacuum cleaner is not suitable for the vacuuming of asbestos or asbestos dust.
- Do not vacuum anything that is burning or smoking, such as cigarettes, matches, or hot ashes.
- Ensure the hose and connections are always pointed away from the users face, hair, ears and eyes during operation and never direct the nozzle towards persons or animals.

- Clear the working area of any items or possessions that you do not wish to be vacuumed before operation.
- Keep cord away from heated surfaces.
- Do not expose to rain. Store indoors.
- Do not unplug by pulling on the cord. To unplug, grasp the plug, not the cord.
- Do not use with damaged cord, plug or other parts.
- Do not pull or carry by cord, use cord as handle, close a door on cord, or pull cord around sharp edges or corners.
- Do not handle the plug or vacuum cleaner with wet hands.
- To reduce the risk of health hazards from vapours or dusts, do not vacuum toxic materials.
- Frequently check that the float valve positioned underneath the motor is able to move freely.
- Do not use or store near hazardous materials.
- Do not use this vacuum cleaner with a torn filter or without the filter installed.
- Do not allow to be used as a toy. Close attention is necessary when used by or near children.
- To reduce the risk of injury from accidental starting, unplug power cord before changing or cleaning filter.
- Unplug from power supply when not in use and before carrying out maintenance.
- Do not cover the ventilation openings. Do not vacuum with any ventilation openings blocked; keep free of dust, lint, hair or anything that may reduce air flow.
- Keep hair, loose clothing, fingers, all parts of body away from openings and moving parts.
- If the supply cord is damaged, it must be replaced by the manufacturer, a qualified service agent or similarly qualified persons in order to avoid a hazard.
- This appliance can be used by children aged from 8 years and above and persons with reduced physical, sensory or mental capabilities or lack of experience and knowledge if they have been given supervision or instruction concerning use of the appliance in a safe way and understand the hazards involved. Children shall not play with the appliance. Cleaning and user maintenance shall not be made by children without supervision.

- For additional protection: It is recommended that this vacuum cleaner can be used in conjunction with residual current device (RCD) with a rated residual current of 30mA or less.
- Only use the socket outlet on the machine for purposes specified in the instructions.
- If foam or liquid escapes from the machine, switch off immediately.
- Clean the float valve regularly and examine it for signs of damage.
- Precautions should be taken when changing attachments.
- For user servicing, the machine must be dismantled, cleaned and serviced, as far as is reasonably practicable, without causing risk to the maintenance staff and others. Suitable precautions include decontamination before dismantling, provision for local filtered exhaust ventilation where the machine is dismantled, cleaning of the maintenance area and suitable personal protection.
- Perform a technical inspection at least annually, consisting of, for example, inspection of filters for damage, air tightness of the machine and proper function of the control mechanism.
- Besides the operating instructions and the binding accident prevention regulations valid in the country of use, observe recognized regulations for safety and proper use.
- When dust removers are used, the rate at which air is exchanged in the room must be adequate if the exhaust air from the vacuum cleaner is blown into the room (please observe regulations valid in your country).
- Before starting work, the operating staff must be informed on
- use of the vacuum cleaner
- risks associated with the material to be picked up
- safe disposal of the picked up material.
- Before transporting the collection tank, close all the locks. Do not tilt the cleaner if there is liquid in the collection tank. Do not use a crane hook to lift the cleaner.
- When using an extension lead, check the minimum cross-sections of the cable:

Cable length	Cross section	
	< 16 A	< 25 A
up to 20 m	1.5 mm^2	2.5 mm^2
20 to 50 m	2.5 mm^2	4.0 mm^2

⚠ WARNING: When carrying out service or repair operations, all contaminated items which cannot be satisfactorily cleaned are to be disposed of; such items shall be disposed of in impervious bags in accordance with any current regulation for the disposal of such waste.

When using as blower:

- Direct air discharge only at work area.
- Do not use Wet/Dry Vacuum as a sprayer.
- Do not direct air at bystanders.
- Keep children away when blowing.
- Wear safety goggles.

UNPACKING AND CHECKING CARTON CONTENTS

1	Carry Handle	10	Blowing Port	19	Dust Bag
2	Filter Cleaning Button	11	Power Take-off Socket	20	Round Dusting Brush
3	On/Off Switch	12	Hose Storage Rack	21	Power Tool Hose Adaptor
4	Power Regulator	13	Power Cord Storage Hook	22	Metal Extension Wand (x3)
5	Latch	14	Squeegee Inserts	23	Foam Filter
6	Suction Port	15	Brush Inserts	24	Cartridge Filter (pre-installed)
7	Container	16	Floor Nozzle	25	Screw (x6)
8	Drainage Port	17	Suction Hose	26	Instruction Manual
9	Caster	18	Crevice Tool		

ASSEMBLY

NOTE: A Phillips screwdriver is required.

1. Remove all the contents from inside of the vacuum cleaner container.
2. Attach the carry handle into the slots located on the top of the power head (Fig. 1).
3. Turn the container upside down and insert the feet with casters into the slots and apply pressure until they click into place. Secure them with supplied screws (Fig. 2).
4. To position the hose storage rack, insert one end into the channel on the side of the power head, making sure it is secured in place. Apply inward pressure to the other side and insert it into the opposite channel (Fig. 3).
5. Your vacuum cleaner comes ready for dry vacuum cleaning with the cartridge filter pre-installed. If the cartridge filter is not installed, refer to page 12.
6. Optionally, for improved dust filtration, fully fit the dust bag flange onto the inlet stub (Fig. 4).
7. For wet vacuum cleaning, replace the cartridge filter with the foam filter supplied. Do not use a dust bag when wet vacuuming. If the foam filter is not installed, refer to page 13.
8. Secure the power head back on the container using the latches. Insert the locking end of the hose into the suction port of the container. Ensure the push clip is securely positioned (Fig. 5).
9. Choose the desired accessories and/or extension wands and push fit onto the hose nozzle.

Floor Nozzle Attachments

The floor nozzle comes supplied with additional attachments to ensure correct suction across different floor surfaces and applications.

1) To remove the floor nozzle attachments, turn the floor tool holder upside down.
2) Using a flathead screwdriver or other suitable tool, locate the holding clips on each outer edge. Insert a flat edged object directly next to the holding clip, between the insert and the floor tool holder. Pry the attachment up from underneath (Fig. 6 & 7).
3) Insert the new attachments into the holder applying downwards pressure (Fig. 7).
4) The attachments can be used in three combinations (Fig. 8):
   Brush and Squeegee Combination: For use with mixture of wet or dry liquids.
   Dual Brush Combination: For use with dry materials or carpeted floor surfaces.
   Dual Squeegee Combination: For use on hard floor with wet liquids

Note: The textured side of the rubber squeegee must be facing outwards.

OPERATION

1. Switching On/Off

Connect the mains plug to a suitable power outlet.

Position	Status
I	on
O	off
II	automatic synchronized start-up

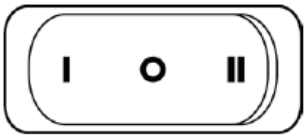

2. Power Tool Take-Off Operation (Fig. 9)

WARNING: Always check the maximum wattage compatibility of the power tool take off socket against the desired power tool before connecting to prevent overloading.

1) Connect the power cable of your power tool to the power take-off socket.
2) If applicable, connect the vacuum suction hose to the dust extractor connector on your tool with the supplied adaptor.
3) Switch the vacuum cleaner to position II, as described in Switching ON/OFF. The moment you switch on the power tool, the vacuum cleaner will also switch on. Once the electrical appliance has been switched off, the vacuum cleaner switches off following a time lapse (around 5 seconds) to allow the suction tube to be emptied.

3. Power Regulator

The airflow can be continuously adjusted by turning the power regulator (Fig. 10).

MIN: Reduced suction for applications which generate a low level of dust.

MAX: Maximum suction performance for use in applications which generate a high level of dust.

4. Filter Cleaning Operation

IMPORTANT: **Only perform the filter cleaning operation when the cartridge filter is installed.**

If the suction performance diminishes, you can improve the suction power with the help of the filter cleaning system.

1) Position the end of the suction hose nozzle into the channel located within the filter cleaner button.
2) Move the on/off switch to the “I” position.
3) Turn the power regulator to the **MAX** position.
4) Press the filter cleaning button down and hold it down for 3-4 seconds (Fig. 11).
5) Repeat the process two more times.

5. Wet & Dry Vacuum Operation

WARNING! ENSURE YOU READ, UNDERSTAND AND APPLY SECTION ENTITLED ‘SAFETY INFORMATION’.

1) Verify that the correct filter is installed and the container latches are secured.
2) Secure the locking end of the hose into the vacuum suction port.
3) Push the desired accessories onto the hose nozzle. The air flow regulation allows you to change vacuum cleaner suction. For best cleaning results, fully close the air flow regulation (Fig. 12).
4) Plug the power cord into a power outlet.
5) Turn on the motor by assigning the switch to the “I” ON position.
6) Once you have completed vacuuming, switch to the “O” OFF position and unplug the power cord from the power outlet.

For Dry Vacuuming:

WARNING: BEFORE INSTALLING, REMOVING OR CLEANING THE VACUUM CLEANER FILTER, ENSURE THAT THE POWER CORD IS UNPLUGGED AND SWITCHED OFF.

1) To prepare your vacuum cleaner for dry vacuuming, install the cartridge filter over the filter cage. Carefully push filter until it sits flush forming a tight seal. Tighten the filter retainer lock clockwise to secure against the internal filter cage (Fig. 13).

2) Optionally, fully fit the dust bag flange onto the inlet stub. The vacuum cleaner can we be used with or without dust bags.

IMPORTANT: Check the filter regularly for optimal performance. An old or blocked filter will reduce suction performance.

For Wet Vacuuming:

1) To prepare your vacuum cleaner for wet vacuuming, release the retainer lock and remove the dry use cartridge filter.
2) Carefully install the supplied foam filter over the internal filter cage, making sure the whole cage is covered (Fig. 14).

WARNING:
DO NOT USE THE CARTRIDGE FILTER FOR WET VACUUMING.
DO NOT USE A DUST COLLECTION BAG FOR WET VACUUMING.

IMPORTANT! When vacuuming large quantities of liquids, do not immerse the nozzle completely; leave a gap at the tip of the nozzle to allow air inflow. The machine is fitted with a float valve that stops the suction action when the container reaches its maximum capacity. You will notice an increase in motor noise. When this happens, turn off the machine, disconnect from power supply, and drain the liquid using the drainage hose. Ensure the drainage cap is re-installed before continuing to vacuum.

6. Blower Operation

WARNING: KEEP BYSTANDERS CLEAR FROM BLOWING DEBRIS.

WARNING: ONLY WORK WITH A CLEAN SUCTION HOSE. DO NOT USE THE BLOWER FUNCTION IN AN ENCLOUSED SPACE OR FOR DUSTS WHICH ARE HAZARDOUS TO HEALTH. DO NOT INHALE DUSTS. DO WEAR A DUST MASK IF BLOWING CREATES DUST THAT MIGHT BE INHALED.

WARNING: ONLY USE THE BLOWING FUNCTION FOR CLEANING, REMOVING DUST, OR DRYING MACHINES AND APPLIANCES.

1) Make sure the container and any collected waste is emptied before using as a blower. This also includes removal of the dust bag.
2) Insert the locking end of the hose into the blowing port on the side of the power head (Fig. 15).
3) Turn on the motor on by turning the switch to the ‘I’ ON position.

MAINTENANCE

WARNING: REMOVE THE POWER CORD FROM THE POWER SUPPLY BEFORE CARRYING OUT ANY MAINTENANCE.

1) Keep all safety devices, air vents and the motor housing free of dirt and dust. Use a soft, dry brush to clean the equipment regularly.
2) Clear all dirt or debris from the collection tank after each use. Allow to dry before replacing the power head. Do not use cleaning agents or solvents; these may damage the appliance.
3) Check the hose, attachments, and power cord to verify that they have not been damaged or any debris is trapped and blocking airflow.

1. Cleaning Cartridge Filter

Remove the filter and clean by gently tapping or brushing off dirt. For optimal performance it is recommended to replace the old filter with a new filter regularly.

2. Cleaning Foam Filter

Remove the foam filter and use a mild soap and water solution to wash and rinse with clean water (Fig. 16). Allow filter to air dry before installing and using again.

TROUBLESHOOTING

WARNING: TO REDUCE THE RISK OF ELECTRIC SHOCK-UNPLUG BEFORE TROUBLESHOOTING.

Cleaning Performance

Vacmaster vacuum cleaners are tested for endurance. If your motor is operating, then the most likely cause for a loss in suction is a blockage or an opening in the vacuum.

To maintain a high cleaning performance from your machine, it is important to replace or clean cartridge filters as necessary. Replace full dust bags to prevent performance drops. A performance drop with clean filters can only be caused by a blockage in the tools or the hose.

PROBLEM	POSSIBLE CAUSE	SOLUTION
The appliance does not work.	No power.	Check the power supply and fuse.
	Functional fault in the power cord, switch, or motor.	Have the damaged part checked by qualified personnel or contact the after sales helpline.
Dust is escaping from the motor cover.	The cartridge filter is missing or damaged.	Put in a cartridge filter or replace it.
	Misuse the cartridge filter when wet vacuuming, causing the damage of cartridge filter.	Replace the damaged cartridge filter with a new one when dry vacuuming.
	Misuse the foam filter when dry vacuuming.	Replace the foam filter with the cartridge filter.
Power tool take-off socket does not work.	Power tool wattage is not compatible with the power tool take-off socket.	Check the wattage is compatible with the power tool take-off socket.
	Incorrect operating mode selected.	Ensure the switch is moved into position II.
Low suction power and high operating noise / vibrations.	Dust bag is full.	Replace the dust bag.
	Suction nozzle, hose, or tank inlet is blocked.	Check the suction nozzle, hose, and tank inlet for obstructions.
	Cartridge filter is blocked.	Remove the cartridge filter and clean.
	Float valve has closed.	Empty the container of any liquid waste and ensure the float value located underneath the filter is able to move freely.
	Power regulator switch is set to minimum.	Adjust variable power regulator.

TECHNICAL DATA

Model Number	VDK1430SFC
Motor	220-240V~50Hz
Power Input	1400W
Max. Power Consumption Of the Power Tool Take-Off Socket Outlet	1590W for BS Socket
	2280W for VDE Socket
Tank Volume	30L
Net Weight	9kg
Max. Vacuum Pressure	24kPa / 240hPa
Max. Flow Rate	68L/s / 244.8m³/h

Noise/Vibration Information

Noise emission values determined according to **EN 60335-2-69**.

Typically, the A-weighted sound pressure level of the power tool is <77 dB(A).

Uncertainty K = 3 dB. The noise level when working can exceed 80 dB(A).

Total vibration values ah (triax vector sum) and uncertainty K determined according to

EN 60335-2-69: a_h<2.5 m/s^2, K =1.5 m/s^2.

RECYCLING AND DISPOSAL

This marking indicates that this product should not be disposed with other household wastes throughout the EU. The machine must be delivered in rigid packaging to avoid damage during transportation. The packaging and the machine itself are manufactured from recyclable materials and should be disposed of accordingly.

PLUG/FUSE REPLACEMENT (UK & IRELAND ONLY)

This product is fitted with a non-rewirable plug. If the plug has to be changed, refer to the picture below.

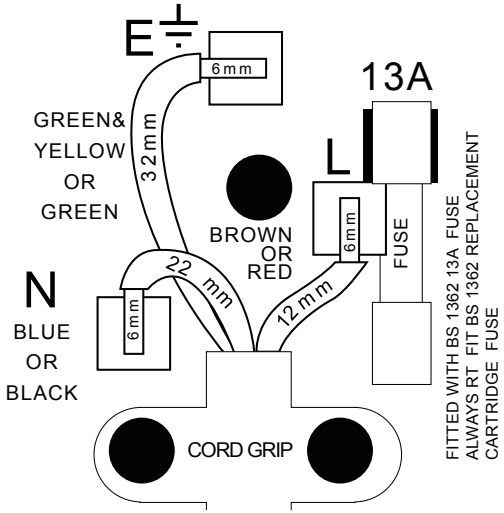

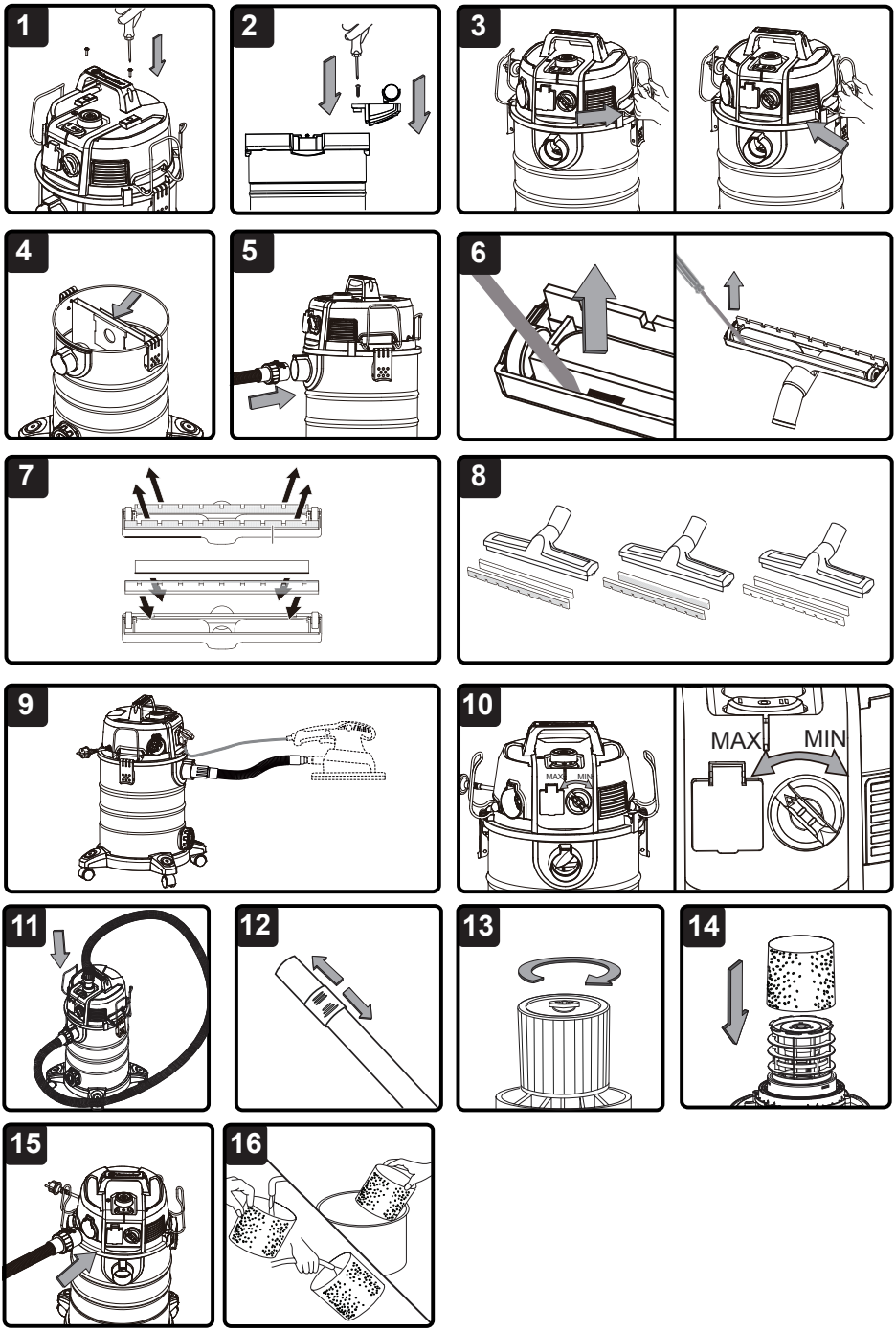
1
2
3
4
5
6
7
8
9
10
MAX
MIN
11
12
13
14
15
16

VDK1430SFC
Suzhou Cleva Electric Appliance Co., Ltd.
No.8 Ting Rong Street
Suzhou Industrial Park, Suzhou
Jiangsu Province, China
www.cleva-europe.com
Made in P.R.C