成品尺寸：142*210mm 2024.11.28

Standing Air Circulating Fan

Instruction Manual

Model: TCPFANBLSILFXL2316R/TCPFANWHSILFXL2316R

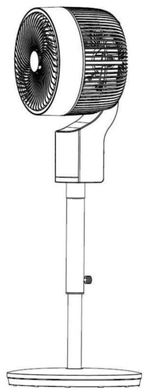

Beat the heat with precision as this fan boasts automatic oscillation, not only sweeping seamlessly from left to right but also effortlessly adjusting its airflow vertically. The perfect blend of versatility and performance.

Structural Diagram

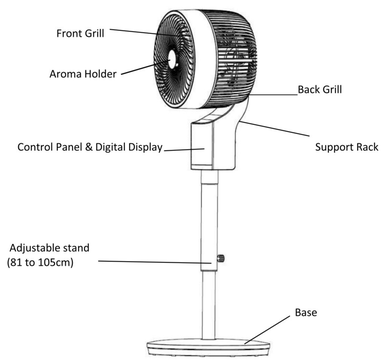

Part List

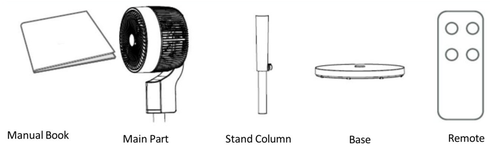

Aroma Installation Instructions

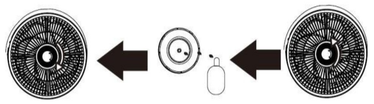

1 Turn the cap of the aroma holder in the center anti clockwise. (Fig. 1)
2 Remove the pad from cap's cavity and carefully pour your aroma liquid onto the pad. (Fig 2)
3 Put the pad back into the cavity.
4 Put the cap back in place and turn clockwise to close (Fig 3)

Assembly Instructions

Remove all parts from the carton box:
1 Remove the screw from the bottom of the stand
2 Place the stand into the hole in the base
3 Place the screw into the hole in the base and tighten;
4 Install the main part by rotating it into the stand.

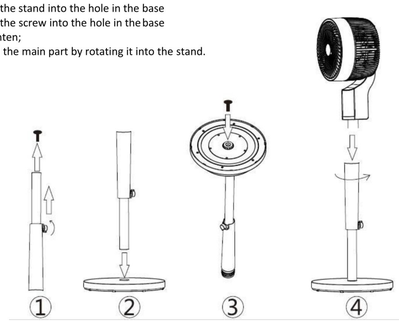

Control Panel and Remote Control Instructions

CONTROL PANEL

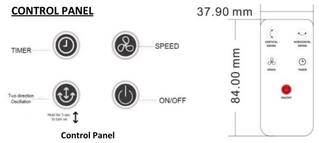

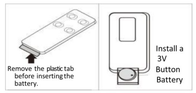

ON/OFF: When plugged in for the first time the fan will beep and all the digits will flash once to indicate that the fan is set to stand-by mode. Press the On/Off button once to turn the fan on.
Oscillation: Press the two-direction oscillation button. One quick touch will turn on the left-right swing. A second quick touch will turn the left-right swing off. To turn on the up-down swing, hold the button for 3-seconds. A second 3-second hold will turn the up-down swing off.
Speed: There are 3 speed settings. The default fan speed when plugged in is 1. Press once to increase to 2, press again to increase to 3. Pressing the speed button again will take the speed back to 1. When next time the product is turned on, the previous speed setting will be retained.
Timer: The timer will allow the fan to continue working for a set time. To use this function, press the button until the required time is reached, up to a limit of 12 hours. Each press equals 1 hour. The time is displayed as '0H', '1H'... to '12H'.
Display Screen: The screen will display the fan speed and timer. When first turned on the screen display will read as '— —'. The screen will turn off if there is no operation for 3 minutes and can be awakened by touching any of the buttons..

REMOTE CONTROL

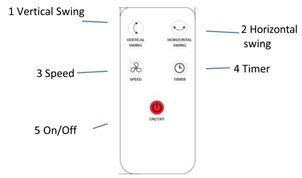

1 Oscillation up and down
2 Oscillation left and right
3 Fan speeds
4 Timer – up to 12 hours
5 On/Off

IMPORTANT NOTICE

The remote control contains a button battery. IF SWALLOWED IMMEDIATELY SEEK EMERGENCY MEDICAL HELP. Swallowing may lead to serious injury or death in as little as 2 hours.
Dispose of button batteries immediately and safely. Flat/dead batteries can still be dangerous.

Safety Notice

Please read this manual carefully and retain for future reference. Ensure all the accessories are available as per this manual. Check the accessories are intact and not damaged. This fan should only be used in an upright position and when fully assembled.

Safety Notices:

1 **DO NOT** use this product in specific circumstances:
Outdoors
Damp conditions
Areas subject to direct sunlight
Corrosive or explosive environment
Extreme temperatures.
2 **DO NOT** use this fan in the immediate surroundings of a bath, shower, or swimming pool.
3 **DO NOT** use next to objects which may get caught in the mechanism, such as curtains.
4 **DO NOT** place on an unstable surface.
5 **DO NOT** plug the fan into the wall socket or turn it on before being properly assembled.
6 **DO NOT** insert objects into the metal mesh of the fan head.
7 **Particular** attention has to be given where children and vulnerable people are present. Children 3 years and younger should be continually supervised when near the heater. Children aged from 3 to 8 years shall only switch on/off the appliance if it has been placed or installed in its intended normal operating position and they have been given supervision or instruction concerning use of the appliance in a safe way and understand the hazards involved. Children aged from 3 to 8 year shall not plug in, regulate and clean the appliance or perform user maintenance.
8 **Confirm** the power is compliant with the label.
9 **DO NOT** use if there is visible signs of damage to the product and/or cable, if the product has been dropped or has been mis-used. Changing the power cable must only be performed by a qualified person.
10 **DO NOT** place this product under a power socket when in use.
11 **DO NOT** touch or unplug with wet hands.
12 **When** moving, or not in use, the fan must be unplugged from the power supply.
13 **This product** is for domestic use only. Not suitable for commercial purposes.
14 **For indoor** use only.
15 **Any disassembly** of the product will render the guarantee null and void.
16 **DO NOT** leave the fan switched on when your property is vacant.
17 **DO NOT** cover any part of the fan.
18 **DO NOT** adjust the fan head manually to avoid any damage to the product

Important Notice:

DO NOT allow the control panel to get wet in any circumstances. Turn the power off and disconnect the fan from the power supply immediately.

There should be no power to the fan when the fan is being cleaned.

Technical Information

P/N	Rated Voltage	Rated Frequency	Rated Power	Control Methods
TCPFANBLSILFXL2316R	220-240V~	50-60Hz	50W	Display panel and Remote control
TCPFANWHSILFXL2316R	220-240V~	50-60Hz	50W	Display panel and Remote control

Electrical Diagram

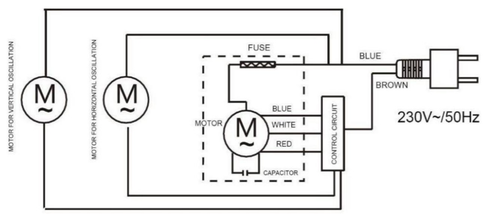

**All pictures displayed are for reference only, please refer to the actual product.*
**The content is fully reviewed and all right reserves if any mistake occurs.*
**Future amendments or updates made without further notice.*

Cleaning the Fan

Turn the fan off and remove from the power supply. Allow the fan to cool down. Clean the outside of the fan by wiping with a damp cloth and buff with a dry cloth and avoid any water entering the fan. Avoid using the damp cloth near to or over the control panel. Do not use any detergents or abrasives. Gently hoover the fan mesh to remove dust. Always allow to dry thoroughly before use. It is recommended to clean the product every 2 months and when preparing to store the product. Remove the lithium battery from the remote control to prevent leakage.

Storing the fan

Enure the product has been turned off and the power cable is unplugged from the electrical outlet before storing. Allow the product to completely cool before handling. When the fan is not in use for a long period of time it should be protected from dust and stored in a clean, dry place. Do not place any heavy items on top of

Correct Disposal of this Product

the appliance during storage as this may result in possible damage to the appliance.

Only dispose of electrical appliances at designated municipal waste facilities. Contact your local government for information regarding the collection systems available.

Guarantee Information

The manufacturer provides guarantee in accordance with legislation of the customer's own country of residence, with a minimum of 1 year, starting from the date on which the appliance is sold to the end user. The guarantee only covers defects in material or workmanship.

Registered Offices

TCP UK Ltd, 1 Exchange Court, Cottingham Road, Corby, Northants NN17 1TY.

TCP France, Quai Gabriel P'ri, 1, Joinville Le Point, France. 94340.